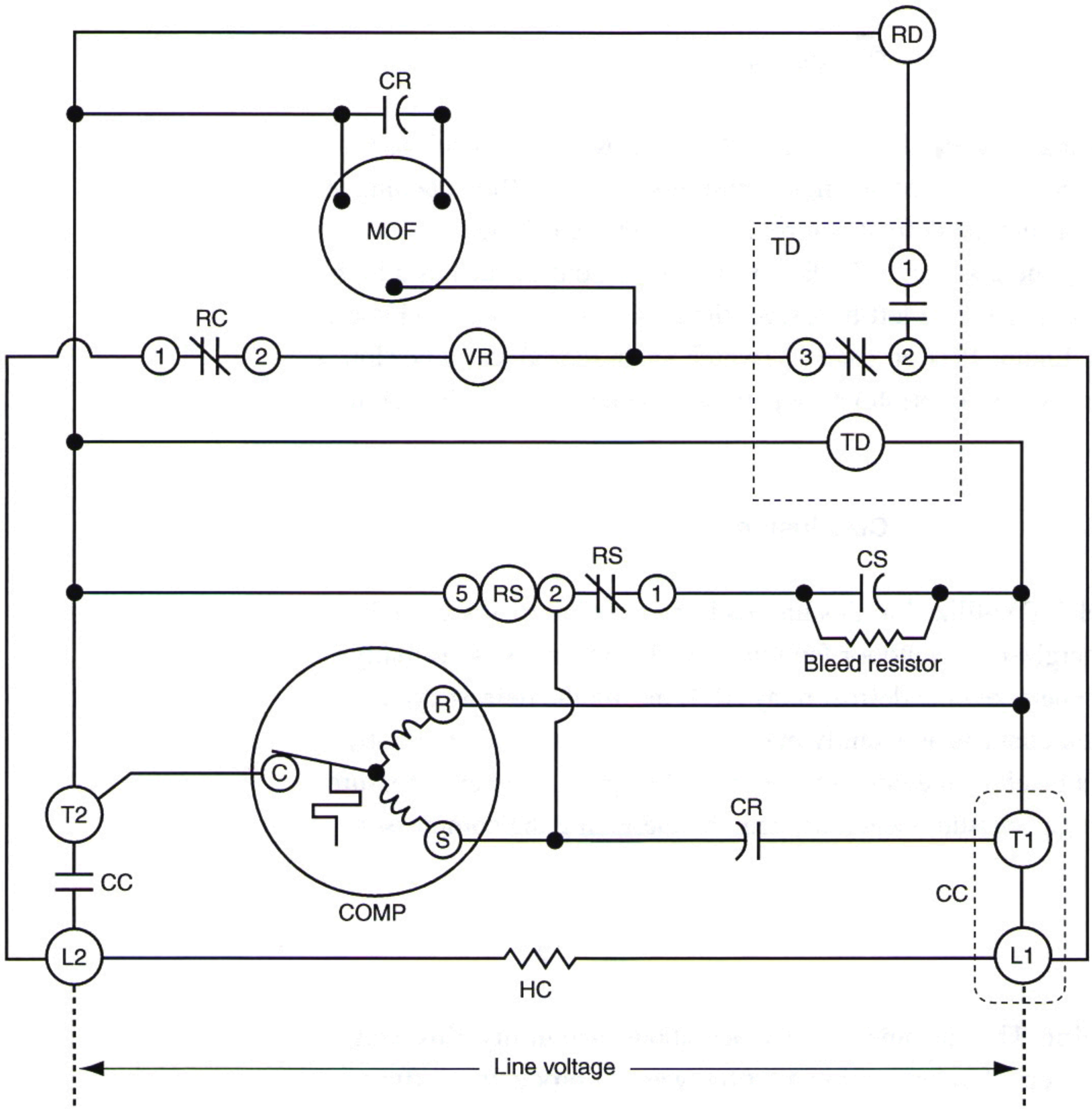

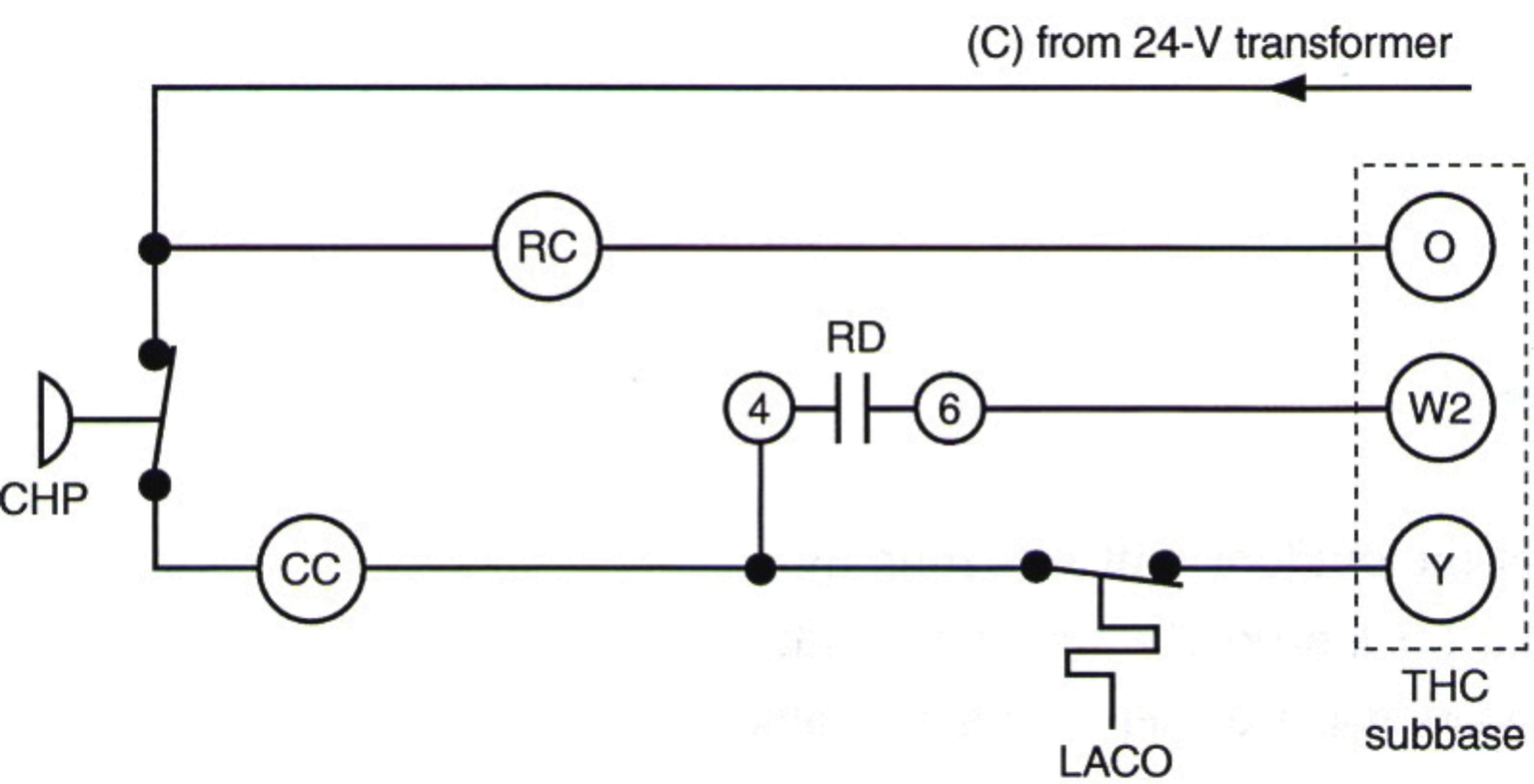

CC.....Contactor
CHP.....Control, high-pressure
COMP.....Compressor
CR.....Capacitor, run
CS.....Capacitor, start
HC.....Heater, crankcase
LACO.....Low-ambient cut-out
MOF.....Motor, outdoor fan
RC.....Relay, changeover
RD.....Relay, defrost
RS.....Relay, start
TD.....Timer, defrost
THC.....Thermostat, heat/cool
VR.....Valve, reversing