the NEWS eBook
Published October 2013
A bnp media Publication

HVACR SERVICE + TROUBLESHOOTING

With The Professor — Part 2

By John Tomczyk

Contents

About The Author

John Tomczyk is co-author of the book *Refrigeration and Air Conditioning Technology* published by Delmar, Cengage Learning. He is author of the book *Troubleshooting and Servicing Modern Air Conditioning and Refrigeration Systems* published by ESCO Press. He is also author of an EPA-approved *Technician Certification Program Manual* and a *Universal R-410A Safety and Retrofitting Training Manual.* He also is a monthly columnist for *Air Conditioning, Heating and Refrigeration News* magazine. Tomczyk has 28 years of teaching experience at Ferris State University in Big Rapids, Mich., along with many years of HVACR service experience. To order the book *Refrigeration and Air Conditioning Technology,* call (800) 648-7450. Tomczyk can be reached by email at tomczykjohn@gmail.com.

Published by *The Air Conditioning, Heating and Refrigeration News,* October 2013.

Restricted Metering Device

This chapter explores how a restricted metering device will affect system performance and efficiency. The system is a commercial refrigeration system employing a receiver and a thermostatic expansion valve (TXV) as the metering device. The refrigerant is R-134a. Here are ways a metering device (TXV) can become restricted:

- Plugged inlet screen.
- Foreign material in TXV's orifice.
- Oil logged from refrigerant flooding the compressor.
- TXV adjusted too far closed.
- Wax buildup in valve from wrong oil in system.
- Sludge from the byproducts of a compressor burnout.
- Partial TXV orifice freeze-up from excessive moisture in the system.
- Manufacturer defect in the valve.

A system with a restricted metering device has the very same symptoms as a system with a liquid line restriction that occurred after the receiver. This is because the TXV is actually part of the liquid line. A TXV being restricted will cause the evaporator, compressor, and condenser to be starved of refrigerant. This will cause low suction pressures, high superheats, low amp draws, and low head pressures.

Also, the symptoms of a restricted TXV system are very similar to a system with a refrigerant undercharge. However, the undercharged system will have low subcooling levels. Service technicians often confuse an undercharged system with a restricted metering device.

Adding refrigerant to a system with a restricted meter device will only raise the subcooling amounts in the condenser to a level where the head pressure may elevate. This is caused from a lack of internal volume of the condenser to hold the added refrigerant. Even the receiver may overfill if too much refrigerant is added.

A Checklist

The following is a checklist for a system with a restricted metering device:

MEASURED VALUES

Compressor discharge temperature: 200˚F
Condenser outlet temperature: 70˚
Evaporator outlet temperature: 30˚
Compressor inlet temperature: 65˚
Ambient temperature: 70˚
Box temperature: 30˚
Compressor volts: 230
Compressor amps: Low
Low side (evaporating) pressure: 1.8 psig (-10˚)
High side (condensing) pressure: 104.2 psig (85˚)

CALCULATED VALUES

Condenser split: 15˚
Condenser subcooling: 15˚
Evaporator superheat: 40˚
Compressor superheat: 75˚

Symptoms

Symptoms can be:

- Somewhat high discharge temperature.
- Low condensing (head) pressure.
- Low condenser split.
- Normal to a bit high condenser subcooling.
- Low evaporator (suction) pressure.
- High superheat.
- Low amp draw.
- Short cycle on low-pressure control (LPC).

Here are those symptoms in more detail.

Somewhat high discharge temperature — Somewhat high discharge temperatures are caused from the higher superheats from the evaporator being starved of refrigerant. The compressor is now seeing a lot of sensible heat coming from the evaporator and suction line, along with its heat of compression and motor heat. The compressor will probably overheat from the lack of refrigerant cooling if it is a refrigerant-cooled compressor.

Cutaway of thermostatic expansion valve. *(Courtesy of Sporlan Division, Parker Hannifin Corp.)*

Low condensing (head) pressure — Since the evaporator and compressor are being starved of refrigerant, so will the condenser because of these components being in series with one another. There will be little heat to eject to the ambient surrounding the condenser. This allows the condenser to operate at a lower temperature and pressure.

Low condenser split — Since the condenser is being starved of refrigerant, it can operate at a lower temperature and pressure. This is because it does not need a large temperature difference between the ambient and the condensing temperature to reject the small amount of heat it is getting from the evaporator, suction line, and compressor.

This temperature difference is referred to as the condenser split. If there were large amounts of heat to reject in the condenser, the condenser would accumulate heat until the condenser split was high enough to reject this large amount of heat. High heat loads on the condenser means large condenser splits. Low heat loads on the condenser mean low condenser splits.

Normal to a bit high condenser subcooling — Most of the refrigerant will be in the receiver, with some in the condenser. The condenser subcooling will be normal to a bit high because of this. The refrigerant flow rate will be low through the system from the restriction. This will cause what refrigerant that is in the condenser to remain there longer and subcool more. Note that an undercharge of refrigerant will cause low subcooling.

Low evaporator (suction) pressure — Since the evaporator is starved of refrigerant, the compressor will be starving also and will pull itself into a low-pressure situation. It is the amount and rate of refrigerant vaporizing in the evaporator that keeps the pressure up. A small amount of refrigerant vaporizing will cause the lower pressure.

High superheat — High superheats are caused again from the evaporator and compressor being starved of refrigerant.

With the TXV restricted, the evaporator will became inactive and run high superheat. This will cause the compressor superheat to be high. The 100 percent saturated vapor point in the evaporator will climb up the evaporator coil, causing high superheats.

Low amp draw — High compressor superheats and low suction pressures will cause low-density vapors to enter the compressor. Also, the compressor will be partly starved from the TXV being restricted. These factors will put a very light load on the compressor causing the amp draw to be low.

Short cycle on low-pressure control (LPC) — The compressor may short cycle on the LPC depending on how severe the restriction in the TXV is. The low suction pressures may cycle the compressor off prematurely.

After a short period of time, the evaporator pressure will slowly rise from the small amounts of refrigerant in it and the heat load on it. This will cycle the compressor back on. The short cycling may keep occurring until the compressor overheats. Short cycling is hard on controls, capacitors, and motor windings.

Troubleshooting With Voltmeter

It is of utmost importance for service technicians to understand voltage troubleshooting when servicing HVAC and refrigeration equipment. The majority of service problems are electrical problems, which usually cause mechanical problems. This chapter will illustrate how to voltage troubleshoot using a voltmeter. The figure here shows a 230-V, single-phase, electrical schematic of a typical commercial refrigeration system. The diagram includes a timer assembly with a defrost termination solenoid (DTS), evaporator fans, defrost heaters, temperature-activated defrost termination/fan delay (DTFD) switch, low-pressure control (LPC), high-pressure control (HPC), compressor contactor assembly, and a compressor/potential relay assembly. The system is drawn in the refrigeration mode.

This exercise will simply show what voltages would be measured across certain points of the schematic if a voltmeter were used in troubleshooting. The diagram will also show where Line #1 (L1) is in relation to Line #2 (L2) for ease of understanding the measured voltages.

Notice that any time the voltmeter probes see both L1 and L2, 230 V will be read on the voltmeter. Any time the voltmeter probes see the same line (L1 to L1 or L2 to L2), 0 V will be read on the voltmeter because there is no voltage difference between the same lines. So, if the service technician can determine where L1 and L2 are in the circuit when voltage troubleshooting, the technician can determine what the voltage should be when using a voltmeter for troubleshooting a circuit.

Notice that sometimes a closed switch and an opened switch will read the same voltage. This is illustrated here when measuring the voltages across the DTFD switches. Again, the service technician has to ask himself where L1 is relative to L2. The technician must also notice that power-consuming devices may read 0 V with a voltmeter if they are not energized and only one line is measured with the voltmeter. This is illustrated across the defrost heater where L2 is measured relative to L2 (itself). The defrost heater is not energized in this case, and is simply a conductor of electricity, not a power consuming device.

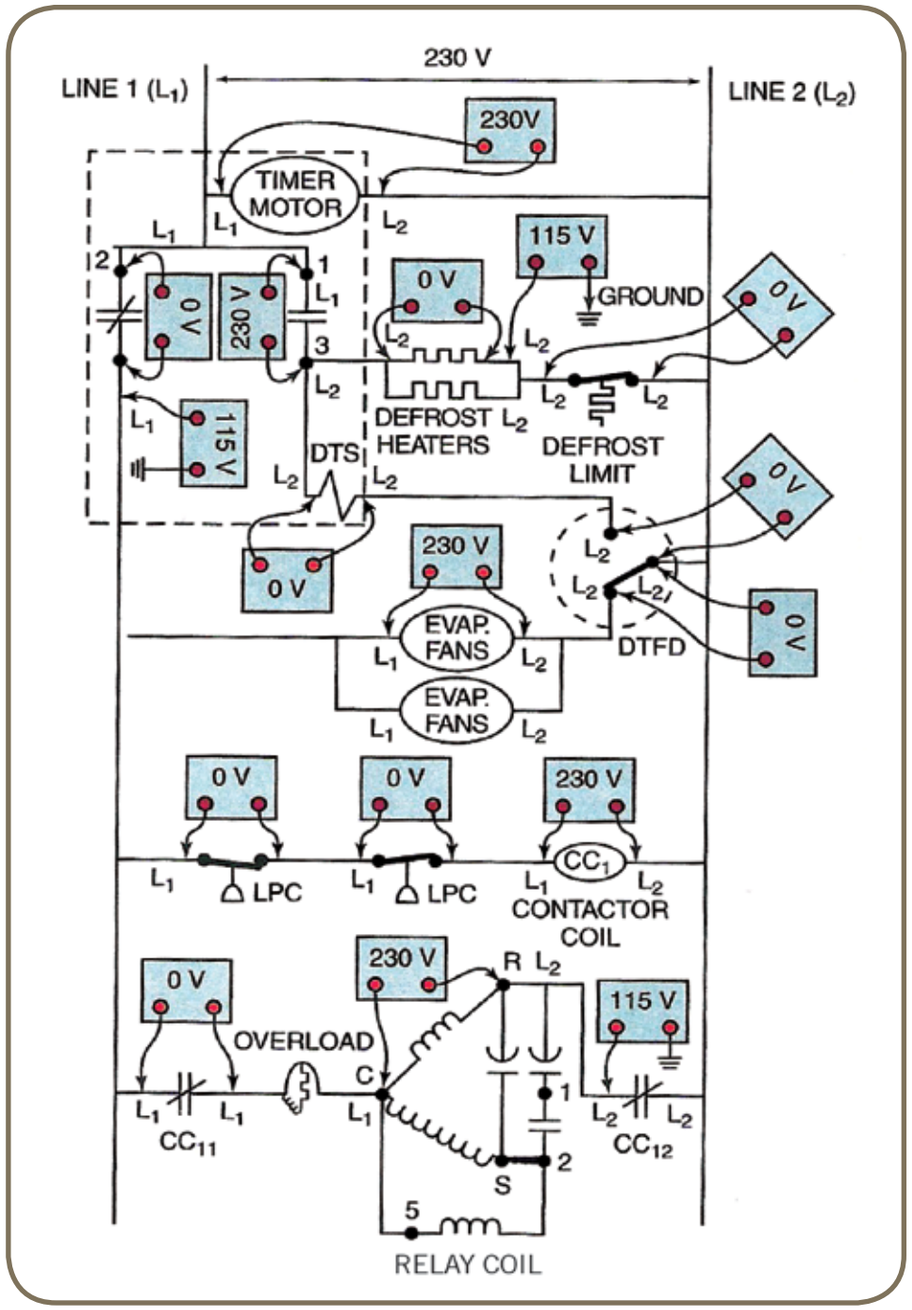

The Scroll Compressor — A History

This is the first in a series of three chapters covering the scroll compressor. This first chapter will cover the history of the scroll compressor along with scroll compressor operation. The next chapter will cover scroll compressor advantages and the modulating scroll compressor. The third chapter will cover digital capacity control for scroll compressors and scroll compressor protection.

The concept of compressing a gas by turning one scroll against another around a common axis isn't new. Scroll compressor technology has been around for 100 years, but it did not become commercially available and cost effective until the mid-1980s. Today, it continues to be even more fine-tuned and is available in many applications.

The major hurdle in making the scroll compressor a viable product was achieving a balance between the need for high volume precision manufacturing, and the ability to consistently achieve high performance and efficiencies, low sound levels, and great reliability.

In fact, it is the scroll compressor's ability to reach higher levels of SEER that helped guide the industry through government-mandated regulations. Every central split cooling system manufactured in the United States today must have a SEER of at least 13. Federal law as of Jan. 23, 2006, mandated this energy requirement. Also, with the phaseout of R-22 just around the corner, manufacturers of HVACR equipment are looking for energy-efficient methods to apply to their equipment to meet these new energy requirements.

Figure 1 (left). Scrolls are now in their fifth generation. *(Courtesy of Emerson Climate Technologies.)*

SEER is calculated based on the total amount of cooling (in Btu) the system will provide over the entire season, divided by the total number watt-hours it will consume. Higher SEERs reflect a more efficient cooling system.

Because of the federal mandate of 13 SEER, most air conditioning and heat pump manufacturers looked for more efficient evaporator and condenser designs, more efficient compressors like the scroll compressor, and more efficient fan motors, along with more sophisticated control systems to meet the new energy-efficiency requirement.

Scrolls are now in their fifth generation (Figure 1). Because of the scroll compressor's fewer moving parts, it operates much quieter than other compressor designs and technologies. Less noise and higher efficiencies have become two key selling points for the scroll compressor to be installed in residential air conditioning units.

Commercial Cooling

The next step for the scroll compressor was for use in commercial cooling equipment. A major development for commercial scroll compressors has

Figure 2. One of the two spiral-shaped scrolls in a scroll compressor. *(Courtesy of Ferris State University.)*

Figure 3. The other of the two spiral shaped scrolls in a scroll compressor. *(Courtesy of Ferris State University.)*

been modulating technology. Modulating technology is able to maintain ideal comfort levels in buildings like churches, where rooms can be empty for hours and then suddenly fill to capacity. Modulation technology is accomplished in several ways. Some high-end systems now have communication systems on-board that enable components to talk to each other.

Refrigeration

The next major application for the scroll compressor was in refrigeration. The scroll compressor's reliability and durability proved itself in refrigeration applications. It is used in walk-in coolers, reach-ins, and distributed refrigeration systems. Beyond coolers and freezers, the scroll compressor has found its way into soft-serve ice cream machines, frozen carbonated beverage machines, and more. Scroll compressors are also being utilized in cryogenic equipment, Magnetic Resonance Imaging (MRI) machines, and even some dental equipment.

Scroll compressor operation is relatively simple. Two spiral-shaped scrolls fit inside one another (Figures 2 and 3). The two mating parts are often referred to as involute spirals. One of the spiral-shaped parts stays stationary, while the other orbits around the stationary member. The orbiting motion is created from the centers of the journal bearings and the motor being offset (Figure 4, page 9).

It is a true orbital motion, not a rotational motion. This orbiting motion causes continuous crescent-shaped gas pockets to be formed (Figure 5, page 9). The orbiting motion draws gas into the outer pocket and seals it as the

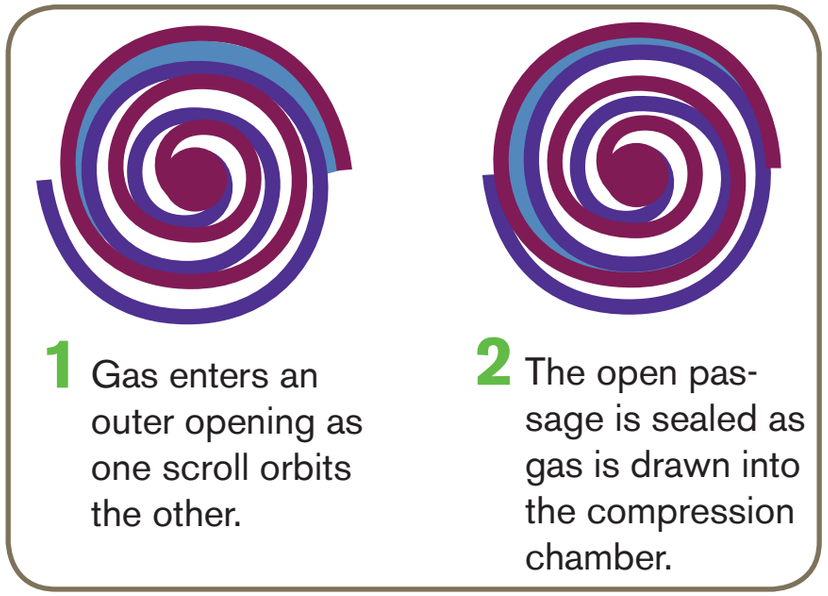

Figure 4 (left). The orbiting motion is created from the centers of the bearings. *(Courtesy of Ferris State University.)* **Figure 5 (middle).** The orbiting motion causes continuous crescent-shaped gas pockets to be formed. *(Courtesy of Emerson Climate Technologies.)* **Figure 6 (right).** The gas pocket is fully compressed and is discharged out of a port of the non-orbiting scroll member. *(Courtesy of Ferris State University.)*

orbiting continues. This continuous orbiting motion causes the crescent-shaped gas pocket to become smaller and smaller in volume as it nears the center of the scroll form. Once at the center, the gas pocket is fully compressed and is discharged out of a port of the non-orbiting (fixed) scroll member (Figure 6).

Several crescent-shaped gas pockets are compressed at the same time, which provides for a smooth and continuous compression cycle. Thus, the scroll compressor conducts its intake, compression, and discharge phases simultaneously.

The scroll compressor always takes a fixed volume of gas at suction pressure, and then decreases the same gas volume which increases its pressure. In fact, during the discharge phase, the scroll compressor compresses the discharge gas to zero volume, eliminating any carryover of trapped discharge gas in a clearance volume characteristic of piston-type compressors. Because of this, the scroll compressor is often referred to as a "fixed compression ratio" compressor.

Unlike piston-type compressors, the scroll compressor has no re-expansion of discharge gas which can be trapped in a clearance volume. This is why piston-type compressors are often referred to as "variable compression ratio" compressors. This contributes to low volumetric efficiencies in piston-like compressors.

Scroll Compressor Advantages

The methods in which the two scroll members of a scroll compressor interact and operate have several advantages. When liquid refrigerant, oil, or small solid particles enter between the two scrolls, the mating scroll parts can actually move apart in a sideways direction. This is referred to as "radial" movement. This radial movement eliminates high-stress situations and allows for just the right amount of contact force between mating scroll surfaces.

This action allows the compressor to handle some liquid. When a liquid slug is experienced, the scroll's mating parts will separate slightly and allow for the pressurized gas to vent to suction pressure. This allows the liquid slug to be swept from the mating scroll surfaces to suction pressure and vaporize. A gurgling noise may be heard during this process. The compressor may even stall briefly and then restart as the excess liquid is purged out of the scrolls. Scroll compressors handle liquid better than other compressors, but still can require additional accessories like crankcase heaters and suction line accumulators for added protection.

As the orbiting scroll orbits, centrifugal forces on the sides of the mating scrolls, along with some lubricating oil, form a seal that prevents gas pocket leakage. This is often referred to as "flank sealing," a major contributor to the scroll's high efficiency. A small amount of lubricating oil is usually entrained in the suction gases, and along with the centrifugal forces, provides the flank sealing.

Tight up-and-down mating or sealing of each scroll's tips prevents any compressed gas pocket leakage and adds to the efficiency. This up-and-down sealing is often referred to as "axial" sealing. Some scroll manufacturers use tip seals for the axial seal (Figure 1).

Figure 1. Tip seals for axial sealing. *(Courtesy of Ferris State University.)*

Scroll tip seals act the same as piston rings in a reciprocating piston-type compressor. These tip seals ride on the surface of the opposite scroll and provide a seal so gases cannot escape between mating scroll parts and the tips of the scrolls.

The scroll compressor requires no valves, so it does not have valve losses that contribute to inefficiencies as piston-type compressors do. As mentioned earlier, the scroll compressor has no re-expansion of discharge gases, which can be trapped in a clearance volume and cause low volumetric efficiencies. This is why the scroll compressor has a very high capacity in high-compression ratio applications.

A considerable distance separates the scroll compressor's suction and discharge ports or locations. This greatly reduces the transfer of heat between the suction and discharge gases. Because of this, the suction gases will see less heat transferred into them and will have a higher density. This will increase the mass flow rate of refrigerant through the scroll compressor.

Because of the scroll's continuous compression process, and the fact that it has no valves to create valve noise, the scroll compressor produces very low gas-pulsation noises and very little vibration when compared to piston-type compressors.

Finally, the scroll compressor's simplicity requires only the stationary and the orbiting scroll to compress gas. Piston-type compressors require about 15 parts to do the same task.

In summary, the main reasons scroll compressors are gaining popularity over piston-type compressors in energy efficiency, reliability, and quieter operation are:

- No volumetric losses through gas re-expansion as with piston-type compressors.
- The scroll compressor requires no valves, so it does not have valve losses that contribute to inefficiencies as piston-type compressors do.
- Separation of suction and discharge gases reduces heat transfer losses.
- Centrifugal forces within the mating scrolls maintain nearly continuous compression and constant leak-free contact.
- Radial movement eliminates high-stress situations and allows for just the right amount of contact force between mating scroll surfaces. This action allows the compressor to handle some liquid.
- Scroll compressors have a continuous compression process and have no valves to create valve noise. This creates very low gas-pulsation noises and very little vibration when compared to piston-type compressors.

Figure 2 (left). Two-step modulating scroll compressor. *(Courtesy of Emerson Climate Technologies.)*

Modulating Scroll Compressors

When dealing with an air conditioning system, a compressor with modulating capacity along with a variable-speed blower motor for the conditioned air will deliver much tighter temperature control with a reduced humidity level within the conditioned space than a standard cooling system without these features. The overall comfort level for the occupants will be much higher because the compressor will run longer at part load to reduce humidity levels and maintain very precise temperature levels.

A new technology in scroll compressor design allows the compressor to have a two-step modulating capacity of either 67 percent or 100 percent. In a modern, two-step modulating scroll compressor (Figure 2), the addition of an internal unloading mechanism in the scroll compressor opens a bypass port or vent at the end of the first compression pocket. This internal unloading mechanism is a direct current (dc) solenoid controlled by the second stage of a conditioned space thermostat in either the heating or cooling modes.

The dc solenoid, which is controlled by a rectified external 24-V alternating current (vac) signal initiated by the conditioned space thermostat, moves a slider or modulating ring that covers and uncovers the bypass ports or vents.

The compressed gas is then vented into the beginning of a suction pocket within the scroll.

When the bypass or vent port is opened by de-energizing the dc solenoid, the effective displacement of the scroll is reduced to 67 percent. When the dc solenoid is energized by the second stage of the conditioned space thermostat, the bypass ports are blocked or closed and the scroll is at 100 percent capacity. Again, this opening and closing of the bypass ports or vents are controlled by an internal electrically operated dc solenoid. The unloading and loading of the two-step scroll compressor is done while the compressor's motor is running without cycling the motor on and off.

The compressor motor is a single-speed high-efficiency motor that will continue to run while the scroll modulates between the two capacity steps. Whether in the high (100 percent) or low (67 percent) capacity mode, the two-step modulating scroll operates like a standard scroll compressor.

As mentioned earlier, the internal dc solenoid in the compressor that operates the internal unloading mechanism is energized by the second stage of a conditioned space thermostat. It is expected that the majority of run hours will be at low capacity (unloaded at 67 percent). It is in this mode that the solenoid is de-energized. This allows the two-stage thermostat to control capacity through the second stage of the thermostat in both cooling and heating. An extra external electrical connection is made with a molded plug assembly that contains a full wave rectifier to supply direct current to the solenoid-unloaded coil (Figure 2, page 11). The rectifier is actually located in the external power plug on the compressor.

Digital Capacity Control for Compressors

Compressor capacity control is desirable for optimum system performance when loads vary over a wide range. Compressor capacity control through modulation can reduce power consumption, produce better dehumidification control, and reduce compressor cycling along with smaller compressor starting currents. This is especially important if you are trying to cool an area that has different cooling needs throughout the day. Constant temperatures of ±0.5˚F can be accomplished in every room, at any time of the day, whether the room is mostly empty or standing room only with a digital capacity scroll doing the cooling.

Axial Separation of Mating Scroll Sets

If the mating scroll members of a scroll compressor are separated axially, there will be no refrigerant gas compressed and only 10 percent power usage will be realized. If varying the amount of time they are separated can control axial separation of the mating scrolls, capacity control can be achieved between 10 and 100 percent.

The separation of the mating scrolls is achieved by bypassing a controlled amount of discharge gas to the suction side of the compressor through a solenoid valve. In a second-generation digital scroll with internal piping and solenoid (Figure 1), the pressure in the modulating chamber is lowered by energizing the solenoid valve.

Discharge gas is metered through a bleed hole and the scrolls separate axially. No flow of refrigerant gas takes place when the mating scrolls are separated. This axial separation causes the scroll compressor to be unloaded.

Figure 1. Second-generation digital scroll with internal solenoid and piping. *(Courtesy of Emerson Climate Technologies.)*

Solenoid Valve Modulation

Modulating capacity is achieved by either energizing or de-energizing the solenoid valve. An energized solenoid will unload the compressor by axially separating the scrolls and the compressor's capacity is 0. When the solenoid valve is de-energized, the compressor's capacity is 100 percent. Solenoid cycle times between 10 and 30 seconds should be used to minimize solenoid valve cycling and to make the system more responsive. One complete "cycle time" is a combination of solenoid valve energized (unloaded) time plus de-energized (loaded) time.

It is suggested to never de-energize the solenoid less than 10 percent of the cycle time, to ensure enough refrigerant gas flow for motor cooling, because the digital scroll is a refrigerant-cooled compressor. Example: If you have a 30-second cycle time and the solenoid is de-energized for 20 seconds, then energized for 10 seconds, the resulting capacity will be:

(20 ÷ 30) = 66.6 percent

Any normal control parameter, including surrounding air temperature, humidity, or suction pressure, can unload the compressor. A compressor discharge line thermistor is required with a cutout temperature of 280˚. The solenoid valve must have 15 watts of power at the appropriate voltage.

Figure 2. A controller used with the digital scroll compressor. *(Courtesy of Emerson Climate Technologies.)*

Compressor Controller

A compressor controller is used with the digital scroll compressor, which offers many protective features like phase control, short-cycling control, amperage and voltage unbalance, and high-amperage monitoring, to name a few. The controller can also supply a variable voltage to the unloading solenoid valve for open/close time intervals (Figure 2).

In summary, the digital scroll compressor can offer:

- The ability to hold a precise temperature and humidity level.
- Efficient full-load and part-load efficiencies.
- Thirty percent more efficient than traditional methods of compressor modulation.
- Less compressor cycling for longer compressor lives.
- Maximum comfort, efficiency, and reliability in one compressor.

Scroll Compressor Internal Protection

Many modern day scroll compressors incorporate a variety of internal safety controls that can actuate the internal line break motor protection (Figure 1). Some safety features that can be found in the air conditioning scroll less than seven tons include:

- **Temperature Operated Disc (TOD):** A bimetallic disc that senses compressor discharge temperature and opens at 270˚F.
- **Internal Pressure Relief (IPR):** Opens at approximately 400 +/-50-psi differential between high and low side pressures for R-22, and 500 to 625 psi differential for R-410A.
- **Floating Seal:** Separates the high side from the low side. Also prevents the compressor from drawing into a deep vacuum and damaging (shorting) the Fusite electrical terminal.
- **Internal Motor Protection:** An inherent protector sensing both internal temperatures and amperages.

Another innovative scroll compressor protection device is used with compressors for better reliability, diagnostic accuracy,

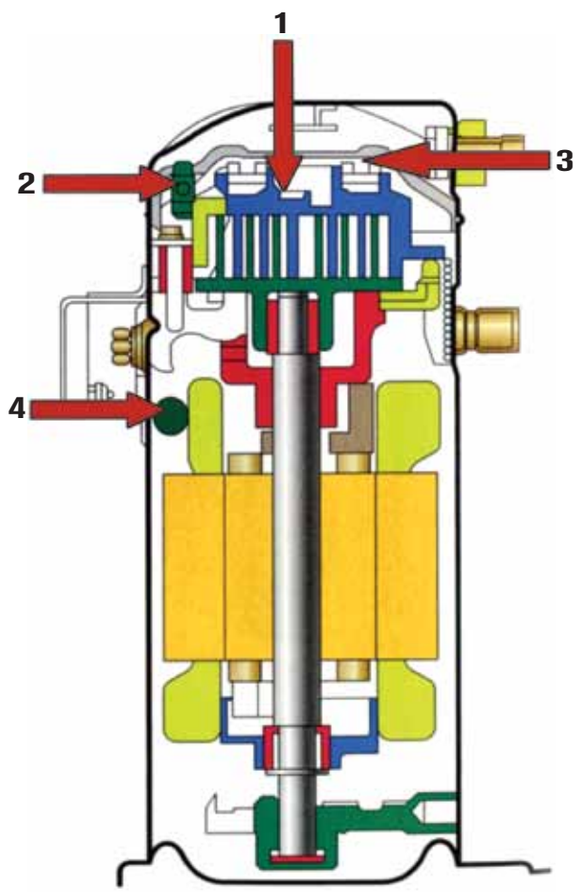

Commercial Comfort Alert Diagnostics Codes

ALERT CODE	SYSTEM CONDITION	ALERT INDICATOR BLINKS	LOCKOUT
Code 2	System Pressure Trip	2 Times	Yes
Code 3	Short-Cycling	3 Times	Yes
Code 4	Locked Rotor	4 Times	Yes
Code 5	Open Circuit	5 Times	No
Code 6	Missing Phase	6 Times	Yes
Code 7	Reverse Phase	7 Times	Yes
Code 8	Welded Contactor	8 Times	No
Code 9	Low Voltage	9 Times	No

Figure 1 (above, left). Internal safety controls for a scroll compressor. *(Courtesy of Emerson Climate Technologies.)*
Figure 2 (above, right). Diagnostic controller with no external sensors. *(Courtesy of Emerson Climate Technologies.)*

speed of service, and reduced callbacks when dealing with compressor systematic troubleshooting. The diagnostic controller installs in the electrical box of a commercial condensing unit, residential unit, or inside a rooftop unit. It is completely self-contained and has no external sensors (Figure 2, page 15).

In fact, it actually uses the compressor as a sensor because the compressor's electrical lines run through the device that acts as a current transformer. It monitors vital information from the scroll compressor that will help pinpoint the root cause of cooling system problems. These common problems include electrical problems, compressor defects, and other broad system faults.

Phase dropouts, miswiring, and short cycling can also be detected through this device. A flashing light emitting diode (LED) will quickly communicate the alert code and direct the service technician to the problem.

Condenser Efficiency Affects the System

One of the main components of any refrigeration or air conditioning system is the condenser. As its name implies, one of the main functions of the condenser is to condense the refrigerant sent to it from the compressor. However, the condenser also has other functions. The three main functions of the condenser are:

1. Desuperheating.
2. Condensing.
3. Subcooling.

Desuperheating

The first passes of the condenser desuperheat the discharge line gases. This prepares the high-pressure, superheated vapors coming from the discharge line for condensation, the phase change from vapor to liquid.

Remember, these superheated gases must lose all of their superheat before reaching the condensing temperature for a certain condensing pressure. Once the initial passes of the condenser have rejected enough superheat and the condensing temperature has been reached, these gases are referred to as saturated vapor. The refrigerant is then said to have reached the 100 percent saturated vapor point.

Condensing

As I mentioned, one of the main functions of the condenser is to condense the refrigerant vapor to liquid. Condensing is system dependent; it usually takes place in the lower two-thirds of the condenser. Once the saturation or condensing temperature is reached in the condenser and the refrigerant gas has reached 100 percent saturated vapor, condensation can take place — if more heat is removed.

As more heat is taken away from the 100 percent saturated vapor, it forces the vapor to become a liquid, or to condense. When condensing, the vapor gradually phase changes to liquid until 100 percent liquid is all that remains. This phase change, or change of state, is an example of a latent heat-rejection process because the heat removed is latent heat, not sensible heat. This phase change happens at one temperature, even though heat is being removed.

This one temperature is the saturation temperature that corresponds to the saturation pressure in the condenser. This pressure can be measured anywhere on the high side of the refrigeration system as long as line and valve pressure drops and losses are negligible. (Table 1 on page 18 is a pressure-temperature chart for HFC-134a.)

Note: An exception to this is a near-azeotropic blend (ASHRAE 400 series blends) of refrigerants. With these blends, there is a temperature glide or range of temperatures when the blend is phase changing.

Subcooling

The last function of the condenser is to subcool the liquid refrigerant. Subcooling is defined as any sensible heat taken away from 100-percent-saturated liquid.

Technically, subcooling is defined as the difference between the measured liquid temperature and the liquid saturation temperature at a given pres-

TEMPERATURE	PSIG	TEMPERATURE	PRESSURE
-10	1.8		
-9	2.2		
-8	2.6	30	25.6
-7	3.0	31	26.4
-6	3.5	32	27.3
-5	3.9	33	28.1
-4	4.4	34	29.0
-3	4.8	35	29.9
-2	5.3	40	34.5
-1	5.8	45	39.5
0	6.2	50	44.9
1	6.7	55	50.7
2	7.2	60	56.9
3	7.8	65	63.5
4	8.3	70	70.7
5	8.8	75	78.3
6	9.3	80	86.4
7	9.9	85	95.0
8	10.5	90	104.2
9	11.0	95	113.9
10	11.6	100	124.3
11	12.2	105	135.2
12	12.8	110	146.8
13	13.4	115	159.0
14	14.0	120	171.9
15	14.7	125	185.5
16	15.3	130	199.8
17	16.0	135	214.8

Table 1. R-134a saturated vapor-liquid pressure-temperature chart.

sure. Once the saturated vapor in the condenser has phase changed to saturated liquid, the 100-percent-saturated liquid point has been reached.

If any more heat is removed, the liquid will go through a sensible heat-rejection process and lose temperature as it loses heat. The liquid that is cooler than the saturated liquid in the condenser is subcooled liquid.

Subcooling is an important process because it starts to lower the liquid temperature to the evaporator temperature. This reduces flash loss in the evaporator, so more of the vaporization of the liquid in the evaporator can be used for useful cooling of the product load.

Dirty or Fouled

If a condenser becomes dirty or fouled, less heat transfer can take place from the refrigerant to the surrounding ambient space. Dirty condensers are one of the most frequent service problems in the commercial refrigeration and summer air conditioning fields today. If less heat can be rejected to the surrounding air with an air-cooled condenser, the heat will start to accumulate in the condenser. This accumulation of heat will make the condensing temperature rise.

When the condensing temperature rises, there will come a point where the temperature difference between the condensing temperature and the surrounding ambient (ΔT) is great enough to reject heat from the condenser.

Remember, temperature difference is the driving potential for heat transfer to take place between anything. The greater the temperature difference, the greater the heat transfer. The condenser is now rejecting enough heat at the elevated ΔT to keep the system running with a dirty condenser. However, the system is now running very inefficiently because of the higher condensing temperature and pressure, causing high compression ratios.

For example, let's say an HFC-134a air-cooled condenser is running at a condensing pressure of 147 psig (110˚F) at an ambient of 90˚ (see Table 1). This is a ΔT of 20˚. If this condenser becomes dirty, the condensing pressure might rise to 215 psig (135˚) at the same

90˚ ambient. The ΔT or temperature difference is now 45˚. The condenser can reject heat at this ΔT, but it makes the entire system very inefficient. In fact, if a high-pressure control is not protecting the system, a compressor burnout can occur with time.

Even the subcooled liquid coming out of the condenser will be at a higher temperature when the condenser is dirty or fouled. This means that the liquid temperature out of the condenser will be further from the evaporating temperature, which causes more flash gas at the metering device and a lower net refrigeration effect.

The compressor's discharge temperature will also run hotter because of the higher condensing temperature and pressure causing a higher compression ratio. The compressor now has to put more energy in compressing the suction pressure vapors to the higher condensing or discharge pressure. This added energy is reflected in higher discharge temperatures and amperage draws.

For all these reasons, we need to keep those condensers clean.

Defrost Termination/Fan Delay Controls

The defrost termination/fan delay control is a temperature-activated, single pole-double throw switch controlled with a remote sensing bulb (Figure 1). The control can be an adjustable type. One example of the installation of an adjustable defrost termination/fan delay control is on a walk-in freezer's evaporator (Figure 2).

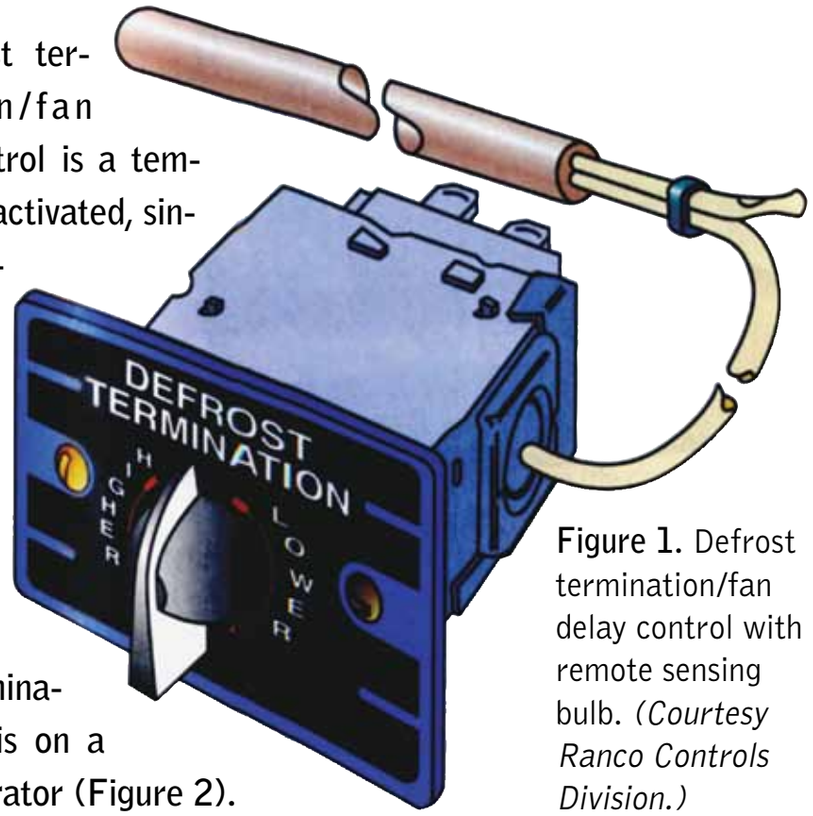

Figure 1. Defrost termination/fan delay control with remote sensing bulb. *(Courtesy Ranco Controls Division.)*

Figure 2. Control on walk-in freezer's evaporator.

The control is wired into the refrigeration circuit. The control's remote sensing bulb is located high on the evaporator where the frost is likely to clear last. The function of this temperature-activated switch is to terminate defrost when the evaporator coil has been defrosted, and to delay the evaporator fans from coming on immediately after defrost.

Defrost time clocks can be programmed for certain defrost duration periods. This is a time duration set at the time clock in minute increments. For example, a defrost time clock on a freezer could be programmed to defrost every six hours (four times daily), and have defrost durations of 40 minutes. However, there will be times throughout the year where the coil does not need the entire 40 minutes. These times could be from low usage of the freezer where the door openings are minimal, or when the humidity is low and not much frost accumulates on the coil. This is where the defrost termination part of the control comes into play.

Defrost Termination

Let's assume that the system does not have a defrost termination/fan delay control. Once the normally open (NO) contacts of the defrost time control have closed and the unit is in defrost, the defrost heaters will be emitting heat,

and frost will be melting off the evaporator coil. Let's say that it only took 10 minutes for all of the frost to leave the evaporator coil. However, there are still 30 minutes (40 minutes minus 10 minutes) left in the programmed defrost duration increment.

If the system has an optional heater safety switch — or sometimes referred to as a defrost limit control — in series with the defrost heater, this limit switch will open and take the defrost heaters out of the active circuit. However, the system's defrost timer will still have 30 minutes left in the defrost mode. The system will simply sit idle, and the product load will suffer in temperature because of no refrigeration for 30 minutes.

After 30 minutes, the defrost timer will switch over to refrigeration and the fans will start immediately. The fans will blow the moist residual defrost heat through the refrigerated space and through the evaporator coil while the system is in refrigeration. This puts the system, thus the compressor, under an extremely high load from high suction pressures.

The compressor will see high suction pressures with dense vapors coming to its cylinders. This will cause high amperage draws and may overload the compressor to a point where its internal or external overload may open.

To prevent this long defrost period and the compressor overloading after defrost, a defrost termination/fan delay switch can be wired into the system. Now, once the normally open contacts of the defrost timer control have closed and the unit is in defrost, the defrost heaters will be emitting heat, and frost and ice will be melting off of the coil.

If it only takes 10 minutes for the ice and frost to leave the coil, the remote bulb of the defrost termination control will sense the defrost heat and contacts between 2 and 3 will be made on the control. This will energize a defrost termination solenoid (release solenoid) in the time clock which will mechanically put the system back into refrigeration. It does this by solenoid action and levers, and will mechanically close the normally closed (NC) contacts and open the normally open contacts of the defrost time control.

This action by the defrost termination solenoid (release solenoid) prevents the system from sitting idle for 30 minutes in defrost with the heaters off. This action actually ends the defrost mode and puts the refrigeration mode back into service.

Note: Often, if the system is microprocessor-controlled, when contacts 2 and 3 close on the defrost termination control, it will be a digital input to the microprocessor and defrost will end.

Fan Delay

Now that the system is in refrigeration, the evaporator fans will be delayed from coming on. This happens until the contacts between 2 and 1 of the defrost termination/fan control close. This usually happens at about 20 to 30˚F, and is sensed and controlled by the control's remote bulb. This is an adjustable setting on most controls. This lets the evaporator coil pre-chill itself and get rid of some of the defrost heat still in the coil. Delaying the fans prevents the suction pressure from getting too high after defrost and overloading the compressor from high amp draws. It also prevents warm, moist air from being blown on the product load in the refrigerated space.

OVER SIXTY YEARS AGO WE DEFINED OUR GUIDING PRINCIPLE:

Engineer reliable tools and equipment that allow you to do more with less. Simple innovations that make a big difference. We call it Simplivation.

WHAT IS SIMPLIVATION?

Simplivation quickly adds digital pressure, temperature and superheat/subcooling capability to any one of your everday analog manifolds (YELLOW JACKET Mini RSA #40852).

LEARN MORE AT WWW.YELLOWJACKET.COM

YELLOW JACKET®

Variable-Frequency Drives

The U.S. Department of Energy has indicated that 65 percent of electrical energy used in commercial and industrial systems comes from electrical motors powering centrifugal pumps and fans. Also, the United States government is the single largest user of energy in the country. Of the government's total energy usage, 45 percent comes from the heating, cooling, and ventilating of buildings.

The HVACR industry is one industry where both centrifugal pumps and fans are employed on an ongoing basis everyday. Because of this, today's HVACR systems are huge energy consumers. Creating higher-efficiency HVACR systems offers a tremendous opportunity for great electrical and monetary savings, thus conserving our nation's valuable energy resources.

Many of these savings can be accomplished through the use of variable-frequency drives (VFD) (Figure 1). The world's first mass-produced VFD was introduced in 1968. Computerization, the reduced cost of electronics, and the interfacing with direct digital control (DDC) systems, along with their energy savings, have made VFDs even more popular today. In fact, VFDs for evaporator and condenser fans and compressor motors are often coming as standard equipment in many newer, high-efficiency, rooftop air conditioning systems incorporating greener, more efficient, HFC-based refrigerants like R-410A.

When retrofitting systems with VFDs, payback periods are ranging from one to two years depending on the type, size, and application of the system. This is a very short payback period yielding fast cost savings, considering that most commercial systems have life cycles of 15 to 20 years. It is estimated that motors incorporating VFDs and linked to the building's DDC system, are up to 65 to 75 percent more efficient than motors operating at a constant speed at line voltage.

Figure 1. Energy savings can be accomplished through the use of variable-frequency drives (VFD). *(Courtesy of Ferris State University.)*

Reduced Capacities at Part-Load Demand

It is usually only on the hottest and coldest days of the year that systems must operate at 100 percent capacity with full fan, compressor, and/or centrifugal pump speeds. Most of the time, system motors can operate

much more energy efficiently at reduced capacities and speeds. Systems with variable-speed fan motors have the ability to deliver variable air volume (VAV) flows. This allows the airflows to exactly match the system's heating and cooling demands and offers the opportunity to save electrical energy and money.

Higher Human Comfort Levels

VFDs also contribute to the overall comfort level within the building by regulating air and water flows according to the instantaneous heating or cooling load. Closer system temperatures and humidity set points can be controlled with variable air and water flows within the HVAC system, resulting in higher human comfort levels. Noise levels are also reduced with the use of VFDs on system motors.

Lower Maintenance Costs and Longer Equipment Life

The elimination of motor line starting shock can be accomplished by soft starting the motor through a VFD and gradually ramping it up to its required speed for the associated heating or cooling load at that time. Reduced maintenance costs and down times can be realized from soft starting the motors instead of starting the motor at full speed and drawing locked rotor amperage (LRA). VFDs also eliminate short cycling of motors, which will result in longer life of the motors and driven equipment.

Major compressor manufacturers are also manufacturing compressors with VFDs to control the speed of the compressor motor. This simply adds to a more accurate control of the capacity of the system. Systems incorporating VFD technology on a combination of motors including evaporator and condenser fans, compressors, and centrifugal pumps for chilled-water systems optimize cost savings and energy efficiency.

Other motors offering cost-saving opportunities within systems include:

- Cooling tower fans;
- Cooling tower water pumps;
- Make-up air fans;
- Exhaust fans;
- Air-handler fans;
- Booster fans;
- Centrifugal hot water pumps; and
- Centrifugal cool water pumps.

Fundamentals of AC Motor Speeds

The following formula can be used to determine the no load (synchronous speed) of an alternating current (ac) motor in revolutions per minute (rpms).

rpm = (Hz) x (60 seconds/minute) (# of pole pairs)

Where:

Hz = is the frequency of the voltage in cycles/second
rpm = Revolutions/minute or motor speed

Notice that the rpms have units of rpm on one side of the equation, but Hz has units in cycles/seconds. So, the conversion from seconds to minutes comes from multiplying by 60 seconds/minute. What is left of the equation after this time conversion from minutes to seconds is that rpms are governed by nothing but the frequency (Hz) and the number of poles. As one can see from the equation, the more poles the motor has, the slower it will turn. Also, as the motor's frequency decreases, the rpm or speed of the motor will decrease.

Conversely, as frequency increases, the motor's speed will increase. Conventional motor speeds are controlled by the number of poles, and the fre-

quency is constant at 60 Hz. Somehow, the number of poles has to be changed usually through a wiring scheme. It is much easier to change the frequency (Hz) of the voltage coming into the motor with electronics than it is to increase or decrease the number of poles in the motor. This is where VFDs come into play.

The equation can be rewritten into the simpler form that follows:

rpm = (Hz) x (60 seconds/minute) (# of poles/2)

By simply multiplying the numerator and denominator (top and bottom) of the equation by 2, the equation now becomes:

rpm = (Hz) x (120 seconds/minute) (# of pole pairs)

Rewriting the equation again without the units and it becomes:

rpm = (Hz) x (120) (# of poles)

This is the form of the equation used in most books. However, do not get the 120 confused with voltage. It is not 120 volts!

Operation of the VFD

A VFD can consist of three separate electronic sections. The three electronic sections' functions and their accompanying electronics components are:

- Rectification (diodes) or converter section;
- Filtering (capacitors and inductors) or dc bus section; and
- Switching (transistors) or inverter.

Rectification: In a circuit diagram of a three-phase VFD (Figure 2, page 26) all three lines of the three-phase power go through diodes in the form of a bridge rectifier. Diodes let current pass only in one direction. The bridge circuit of diodes actually rectifies (changes) the three-phase ac voltage to pulsating dc current (dc). The diodes actually reconstruct the negative half of the waveform into the positive half. So, the dc bus section sees a fixed dc voltage. The output of this section is actually 12 half-wave pulses, which are electronically 60 degrees apart.

Filtering: The filtering section of the VFD simply makes the pulsating dc smoother or filters out its imperfections. These actually can be more than two capacitors wired in parallel with one another, but in series with the bridge rectifier and an inductor. The capacitance of capacitors adds when they are in series. There is synchronous charging and discharging of the capacitors with the three phase input voltage. This makes a pure dc signal from the half-wave signal of the bridge rectifier. The capacitors in parallel filter the voltage wave and the inductor will filter the current wave. Both the inductor and capacitors work together to filter out any ac component of the dc waveform. The smoother the dc waveform, the cleaner the output waveform from the drive.

Switching: The switching or transistor section of the VFD produces an ac voltage at just the right frequency for motor speed control. This section is also called the inverter section. This section converts the dc back to ac. There are two transistors for each output phase. These transistors act as switches for current to flow.

Inverters consist of an array of transistors that can be switched on and off. When the control system sends a signal to the base connection of the transistor, the transistor turns on and allows current to flow through it. When the signal is dropped, the transistor turns off and no current will flow. The base or controlling part of the transistor is controlled by a pre-programmed microprocessor which fires the transistors at appropriate times in six steps.

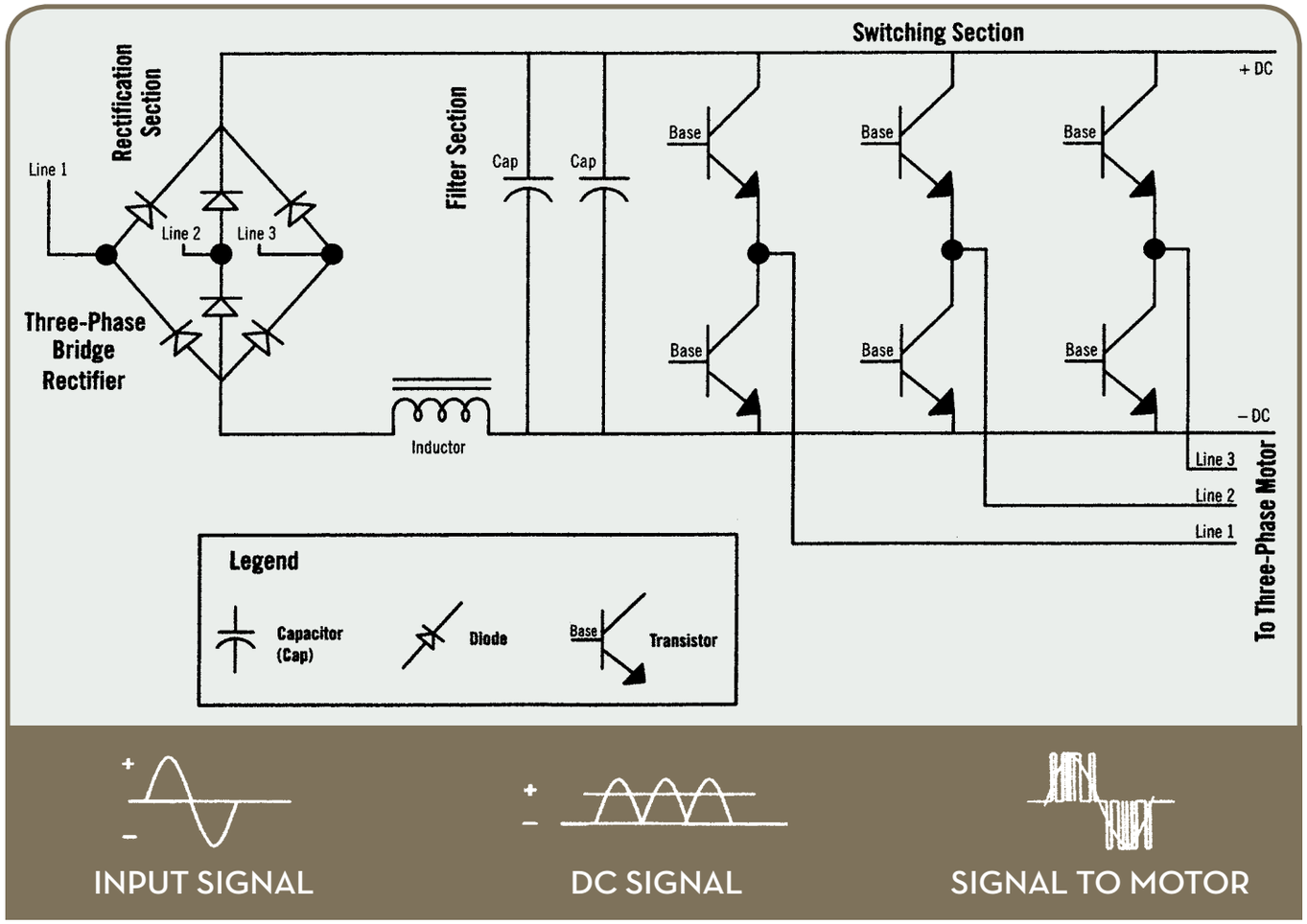

Figure 2. Circuit diagram of a three-phase VFD.

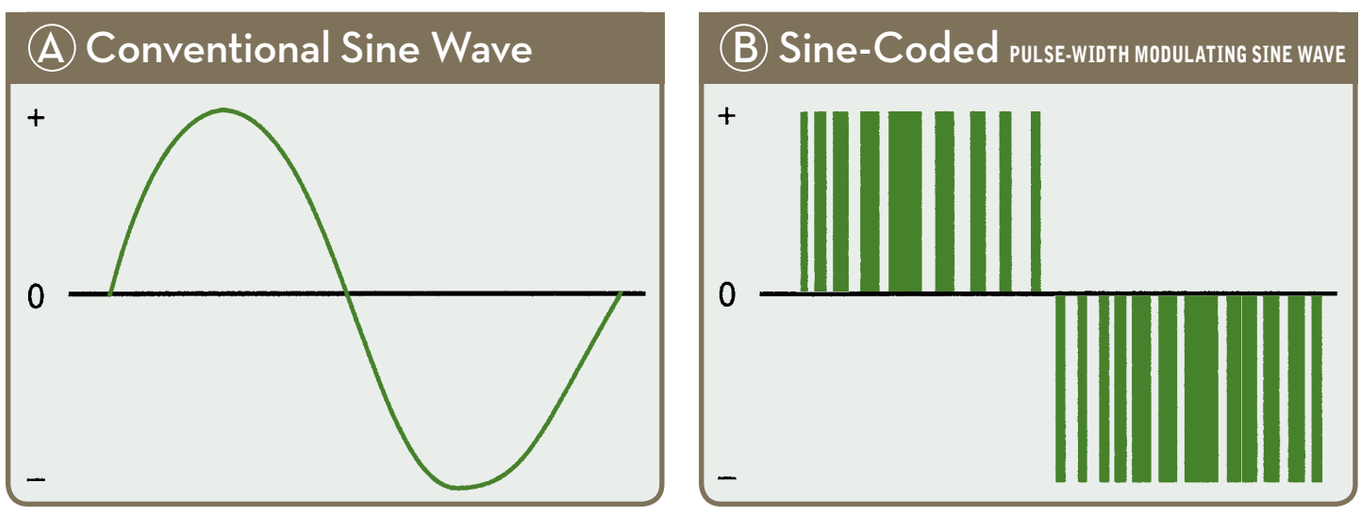

Figure 3. Sine waves and coding.

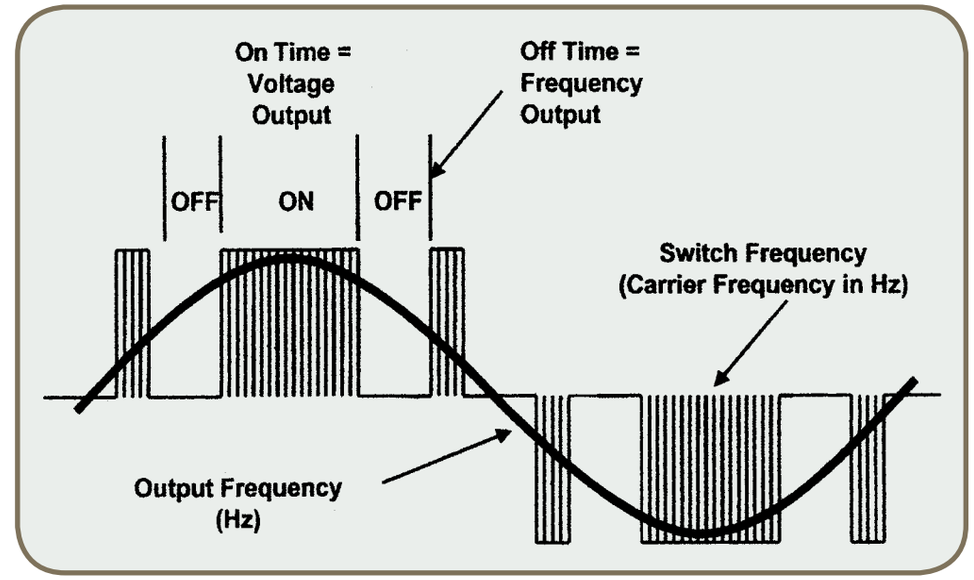

Figure 4. The longer the power device is on, the higher the output voltage will be. The less time the power device is on, the lower the output voltage.

Each set of transistors is connected to a positive and negative side of the filtered dc line (Figure 2).

Today's inverters almost all use these transistors to switch the dc bus on and off at specific intervals. This process is also known as pulse width modulation (PWM). Inverters produce the correct frequency of voltage and current to the motor for the desired speed. This is where the term variable-frequency drive (VFD) originates.

In other words, an inverter creates a variable ac voltage and frequency output. Inverters can actually control motor speed down to about 50 percent of their rated speed and up to about 120 percent to their 60-Hz rated speed.

Motor Speed

The motor's speed is controlled by supplying the motor's stator (stationary) coils small pulses of voltages. At low speeds, the voltage pulses are short; at high speed, the pulses are longer. The PWM pulses are sine coded, meaning that they are narrower at the part of the cycle close to the ends. This makes the pulsating signal look like a sine wave to the motor (Figure 3, page 26).

This output wave is not an exact replica of the ac input sine waveform. Instead, there are voltage pulses. The VFD's microprocessor or controller signals the power device to "turn on" the waveform's positive half or negative half. The longer the power device remains on, the higher the output voltage will be. The less time the power device is on, the lower the output voltage (Figure 4, page 26).

The speed at which power devices switch on and off is referred to as the switch frequency or carrier frequency. As the switch frequency increases, the resolution and smoothness of the output waveform increases. However, as the switch frequency increases, the heat in the power device increases.

Net Oil Pressure

Many larger compressors in the refrigeration and air conditioning field have forced-oiling systems. These compressors are usually over 5 hp. They contain an oil pump located at the end of the compressor's crankshaft (Figure 1). The crankshaft is actually connected to the oil pump and supplies power, which turns the oil pump.

Oil pumps can be of the gear or eccentric type. The oil pumps force oil through drilled holes in the crankshaft and deliver it to bearings and connecting rods (Figure 2). The oil then drops to the crankcase to be picked up again by the oil pump. Smaller compressors usually have some type of splash-type oiling system. These systems have an oil scoop that scoops and flings the oil throughout the crankcase causing an oil fog as the crankshaft turns.

When dealing with compressors that employ an oil pump, many service technicians confuse net oil pressure with oil pump discharge pressure. However, it is of utmost importance that technicians understand the difference between these two pressures when servicing compressors with oil pumps.

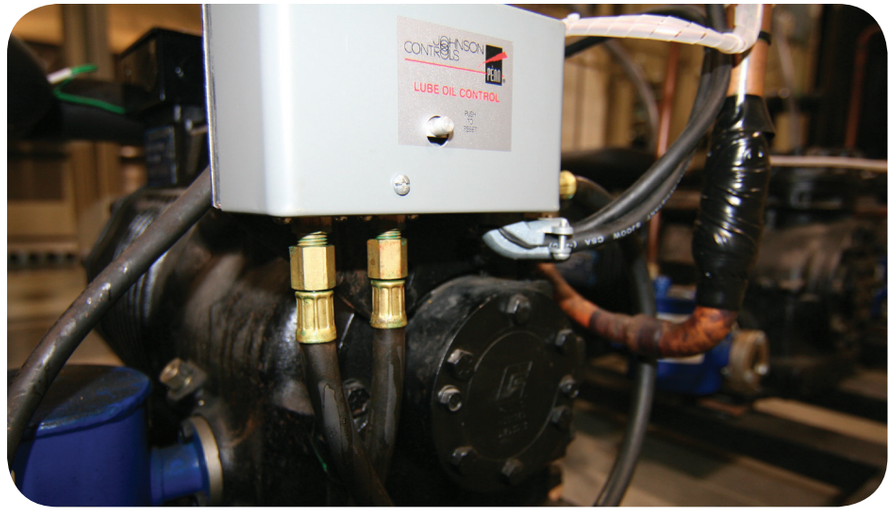

Figure 1. An oil pump is located at the end of the compressor's crankshaft. *(Courtesy of Ferris State University.)*

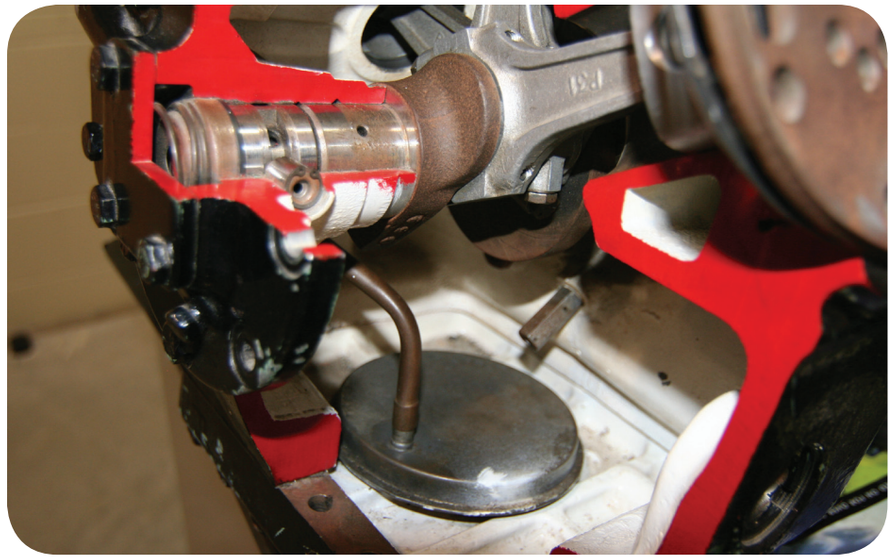

Figure 2. Oil pumps force oil through drilled holes in the crankshaft and deliver it to bearings and connecting rods. *(Courtesy of Ferris State University.)*

The oil pump's rotating gear or eccentrics adds a certain pressure to the oil pumped through the crankshaft. This pressure is considered net oil pressure. Net oil pressure is not the pressure that can be measured at the discharge of the oil pump. The oil pump picks up oil (at crankcase pressure) from the compressor's crankcase through a screen or filter (Figure 2).

The oil pump discharge port's pressure includes both crankcase pressure and oil pump gear pressure it adds to the oil. This is why net oil pressure cannot be measured directly with a gauge. A gauge at the oil pump's discharge port would register a combination of crankcase pressure and oil pump gear pressure. The technician must realize this and subtract the crankcase pressure from the oil pump discharge port's pressure to get the net oil pressure. The equation is as follows:

Oil pump discharge pressure
— Crankcase pressure
Net oil pressure

For example, say the oil pump discharge pressure is 80 psig and the crankcase pres-

sure is 20 psig. What would be the net oil pressure?

To find out, simply subtract the crankcase pressure from the oil pump discharge pressure to get net oil pressure. In this case, it would be 80 psi–20 psi=60 psi net oil pressure.

This means the oil pump is actually putting 60 psi of pressure into the oil when delivering it into the crankshaft's drilled passages. (Figure 3 shows a cutaway of a semi-hermetic compressor incorporating an oil pump and drilled oil passages through the crankshaft.)

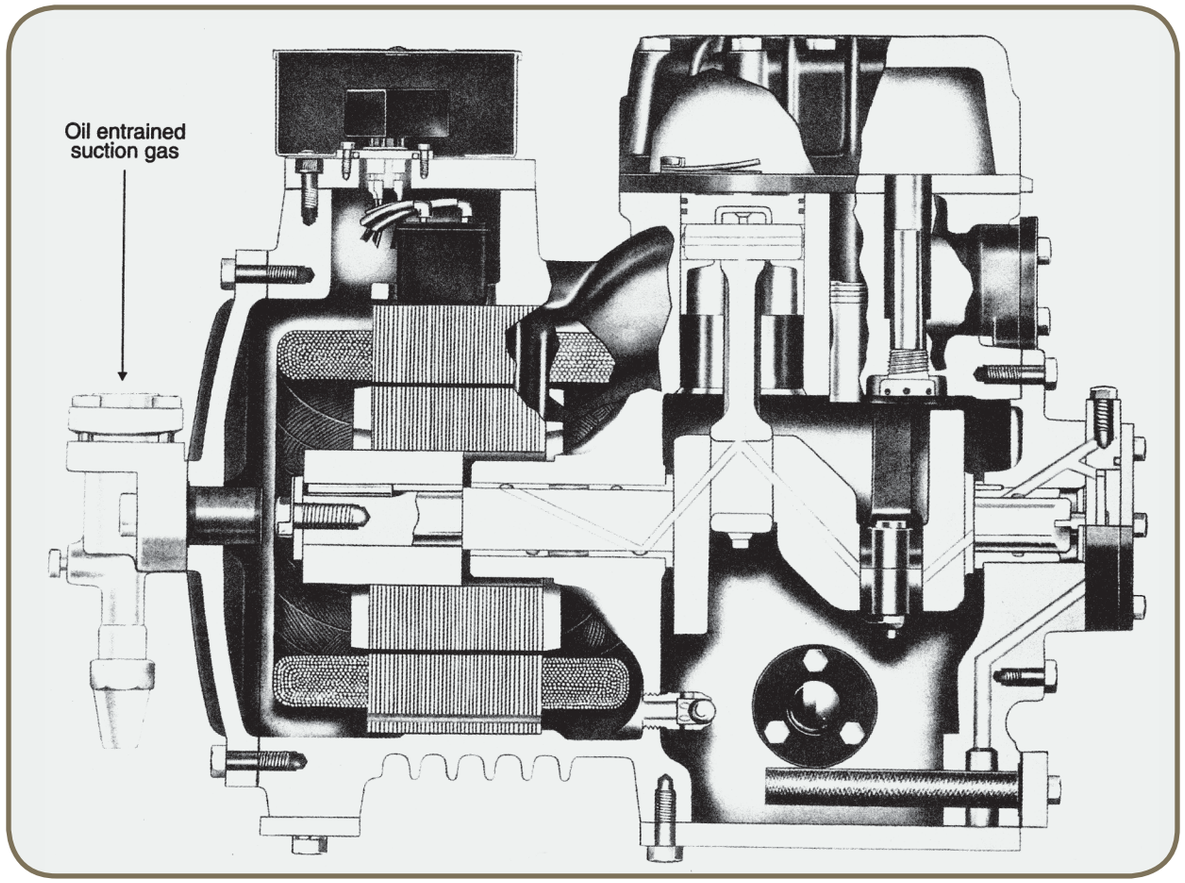

Figure 3. Cut-away of a semi-hermetic compressor incorporating an oil pump and drilled oil passages through a crankshaft. *(Courtesy of Emerson Climate Technologies.)*

Oil safety controllers are called differential-type controllers. They sense the difference between oil pump discharge pressure and crankcase pressure. This is why these controllers have a capillary tube or pressure transducer connected to the discharge of the oil pump and the crankcase to sense a difference of pressures or net oil pressure. (Figure 1 on page 28 shows the pressure transducer sensing net oil pressure in a semi-hermetic compressor.)

Net oil pressures vary from compressor to compressor. Net oil pressures usually range from 20 to 40 psi. Most oil pressure safety controllers will shut the compressor down if the net oil pressure falls below 10 psi. Variables that affect the net oil pressure are:

- Compressor size;
- Viscosity of the oil;
- Temperature of the oil; and
- Bearing clearance.

Larger compressors need more net oil pressure because they have more surface areas to lubricate. The oil pumps must also pump and carry the oil greater distances within the larger compressor. Also, as the oil gets hotter and its viscosity drops, the net oil pressure will also usually drop. As a compressor wears, its tolerances will become greater and easier for the oil to escape through its clearances.

Oil Safety Controllers and Their Circuits

Oil safety controllers often come in two types: bellows (mechanical) and transducer (electronic). Remember, net oil pressure (NOP) or sometimes referred to as useful oil pressure, is the difference between the oil pump discharge pressure and the crankcase pressure (as referenced in chapter 10). Bellows-type controllers sense both crankcase pressure and oil pump discharge pressure, usually through some type of tubing, and then transmit the pressure to flexible bellows. The tubing connected to the bellows is usually copper capillary tubes, high-pressure rubber hose, or a type of high-pressure plastic with a braided aluminum shrouding. [Figure 1 (above) and Figure 2 on page 31 illustrate the internal action of the bellows-type controller.]

Figure 1. The tubing connected to the bellows can be a high-pressure rubber hose, such as shown in the lower right of this photo. *(Coutsey of Ferris State University.)*

Transducer-type controllers use a pressure transducer, which senses a combination of oil pump discharge pressure and crankcase pressure. The pressure transducer has two separate ports to sense both crankcase pressure and oil pump discharge pressure.

The subtraction or difference between these two pressures (net oil pressure) is accomplished by the transducer mechanically. The pressure transducer is connected to an electronic controller by wires. The pressure transducer then transforms a pressure signal to an electrical signal for the electronic controller to process.

Both types of oil safety controllers are referred to as differential-type controllers. The nomenclature comes from the fact that they sense two different pressures. Those pressures are crankcase pressure and oil pump discharge pressure.

Bellows (Mechanical) Controller

The oil pump discharge pressure acts to open the differential pressure switch. Conversely, the crankcase pressure acts to close the switch. One has to remember that the difference between these two pressures is the net oil pressure.

Oil pump discharge pressure
— Crankcase pressure
Net oil pressure

So, if there is a fall in net oil pressure below 9 pounds per square inch differential (psid), the pressure differential switch will close and a heater in series with the pressure differential switch will be energized. There is usually a two-minute delay before the heater will warp a bimetallic strip. This warping action will open the timing switch contacts, which are in series with the motor starter or contactor coil. This action takes the motor out of service and must be manually reset on most controls.

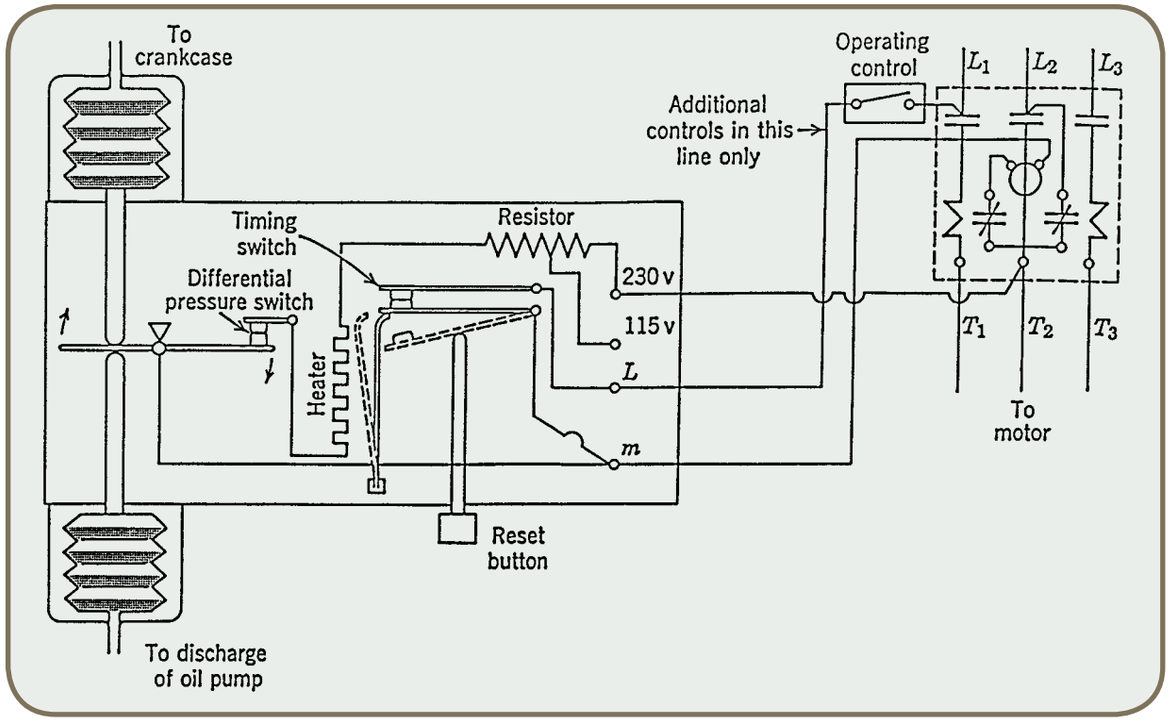

Figure 2. Internal action of the bellows type controller.

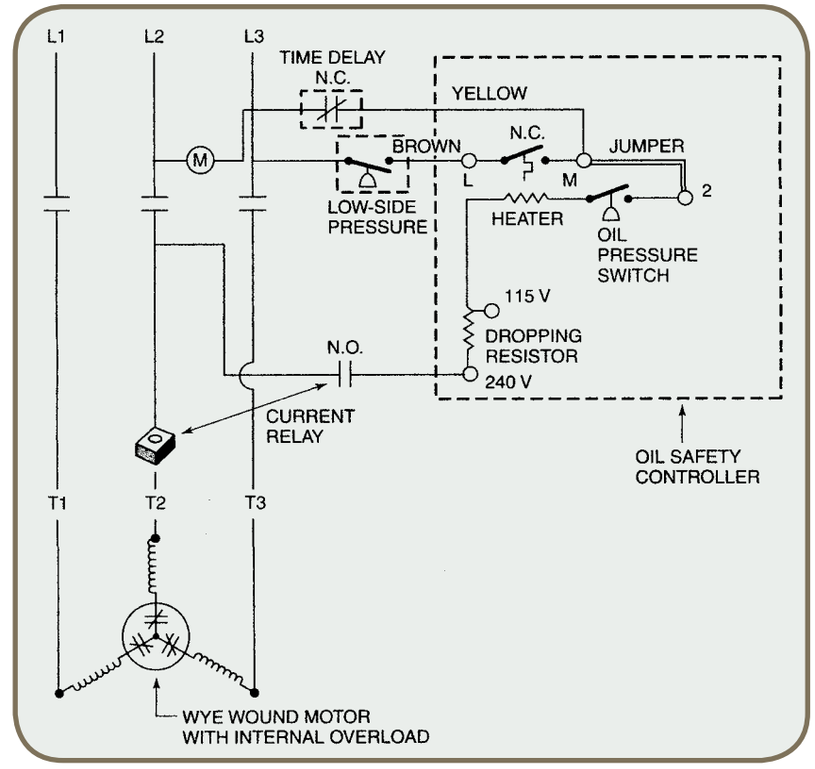

Figure 3. The addition of a current relay on one leg of the compressor will tell the electronic controller that the compressor is not running and will open a circuit to the safety heater on the oil safety control. *(Courtesy of Emerson Climate Technologies)*

Notice that manually pushing the reset button will reset (close) the timing switch contacts once the bimetal strip cools down. The reason for the two-minute time delay is to prevent nuisance trips of the oil safety controller. Often, there are times when the crankcase may have liquid refrigerant in it from an imperfect system. The two-minute delay gives the crankcase time to clear any unwanted refrigerant during periods when refrigerant migration or flooding has occurred. It also avoids shutdowns during short fluctuations in net oil pressure on start-ups.

Remember, when the compressor is off, the net oil pressure is 0 psi and the differential pressure switch contacts are closed. The heater in the oil safety controller will not be energized during the off-cycle because it is wired to the line side of the motor starter contacts. When the motor starter contacts are opened, this action takes L2 out of the heater circuit. At start-up, when the motor starter contacts close and the compressor starts, the differential pressure switch contacts will stay closed and the heater will be energized until at least 9 psid of net oil pressure is developed. As mentioned before, this time delay will prevent nuisance trips of the controller at start-ups.

Internal Overloads

If a motor is equipped with both an internal inherent motor protector and an oil safety controller, the oil safety controller may trip due to a motor overheating or overloading problem on some systems. When the internal overload opens, the motor is shut off but the motor starter coil remains energized with contacts closed. This will trip the oil safety controller in a matter of two minutes because of a lack of net oil pressure. However, the addition of a current relay on one of the legs of the compressor will tell the electronic controller that the compressor is not running and will open a circuit to the safety heater on the oil safety controller (Figure 3).

Low Head Pressure, High Suction Pressure

Many servicemen experience service calls where the compressor has both a low head pressure and a high suction pressure. Often, the refrigeration equipment is still running, but the product temperature is suffering about 7 to 10˚F. These calls are tough to handle because the compressor is still cooling, but not cooling to its rated capacity. The medium-temperature products will spoil quicker and the low-temperature products are not frozen as solid as they should be. They will also spoil sooner.

There are three main reasons why a reciprocating compressor will simultaneously have a low head pressure and a high suction pressure.

- Bad (leaky) compressor valves;
- Worn compressor piston rings; and
- Leaky oil separator return line.

Leaky Compressor Valves

There are a number of reasons why a compressor's valves may become inefficient from being warped or having carbon and/or sludge deposits on them preventing them from sealing. (Figures 1 and 2 show a compressor's suction and discharge valves respectively.)

- Slugging of refrigerant and/or oil;
- Moisture and heat causing sludging problems;
- Refrigerant migration problems;
- Refrigerant flooding problems;
- Acids and/or sludge in the system deteriorating parts;
- TXV set wrong, so there is too much superheat causing compressor overheating;
- Undercharge of refrigerant causing compressor overheating; and
- Compressor overheating from low suction or high head pressures.

Figure 1. Suction valve. *(Courtesy of Ferris State University.)*

Figure 2. Discharge valve.

Compressor overheating is still today's most serious and frequently occurring field problem a service technician will face. (The next chapter will cover compressor overheating and its causes.)

Below is a service checklist for a reciprocating compressor with valves that are not sealing. The system is an R-134a system with a receiver and TXV.

Compressor with Leaky Valves

MEASURED VALUES

Compressor discharge temp.: 225˚F
Condenser outlet temp.: 75˚
Evaporator outlet temp.: 25˚
Compressor inlet temp.: 55˚
Ambient temp.: 75˚
Box temp.: 25˚
Compressor volts: 230
Compressor amps: low
Lowside (evaporating pressure (psig): 11.6 (10˚)
Highside (condensing) pressure (psig): 95 (85˚)

CALCULATED VALUES ˚F

Condenser split: 10
Condenser subcooling: 10
Evaporator superheat: 15
Compressor superheat: 45

Here are some of the symptoms of this system:

- Higher than normal discharge temperatures;
- Low condensing (head) pressures and temperatures;
- Normal to high condenser subcooling;
- Normal to high superheats;
- High evaporator (suction) pressures; and
- Low amp draw.

Higher than normal discharge temperatures: A discharge valve that isn't seating properly because it has been damaged will cause the head pressure to be low. Refrigerant vapor will be forced out of the cylinder and into the discharge line during the upstroke of the compressor. On the down stroke, this same refrigerant that is now in the discharge line and compressed will be drawn back into the cylinder because of the discharge valve not seating properly.

This short cycling of refrigerant will cause heating of the discharge gases over and over again, causing higher than normal discharge temperatures.

Also, discharge gases being forced through small openings in the damaged or dirty leaky valve will generate excessive heat. This phenomenon is referred to as wiredrawing. However, if the valve problem has progressed to where there is hardly any refrigerant flow rate through the system, there will be a lower discharge temperature from the low flow rate of refrigerant.

Low condensing (head) pressures: Because some of the discharge gases are being short cycled in and out of the compressor's cylinder, there will be a low refrigerant flow rate to the condenser. This will make for a reduced heat load on the condenser, thus reduced condensing (head) pressures and temperatures.

Normal to high condenser subcooling: There will be a reduced refrigerant flow through the condenser, thus through the entire system. Most of the refrigerant will be in the condenser and receiver. This may give the condenser a bit higher subcooling.

Normal to high superheats: Because of the reduced refrigerant flow through the system, the TXV may not be getting the refrigerant flow rate it needs. High superheats may be the result. However, the superheats may be normal if the compressor's valve problem is not very severe.

High evaporator (suction) pressure: Refrigerant vapor will be drawn from the suction line into the compressor's cylinder during the down stroke of the compressor. However, during the upstroke, this same refrigerant may sneak back into the suction line because of the suction valve not seating properly. The results are high suction pressures.

A leaky discharge valve will also allow discharge gas to sneak into the compressor's cylinder during the down stroke of the compressor. This will cause the suction pressure to increase because of the suction valve being open during part of the down stroke of the compressor.

Low amp draw: Low amp draw is caused from the reduced refrigerant flow rate through the compressor. During the compression stroke, some of the refrigerant will leak through the suction valve and back into the suction line reducing the refrigerant flow.

During the suction stroke, some of the refrigerant will sneak through the discharge valve because of it not seating properly, and get back into the compressor's cylinder. In both situations, there is a reduced refrigerant flow rate causing the amp draw to be lowered. The low head pressure that the compressor has to pump against will also reduce the amp draw.

Worn Compressor Rings

When the compressor's piston rings are worn, high-side discharge gases will leak through them during the compression stroke giving the system a lower head pressure (Figure 3). Because discharge gases have leaked through the rings and into the crankcase, the suction pressure will also be higher than normal. The resulting symptom will be a lower head pressure with a higher suction pressure. The symptoms for worn rings on a compressor are very similar to leaky valves.

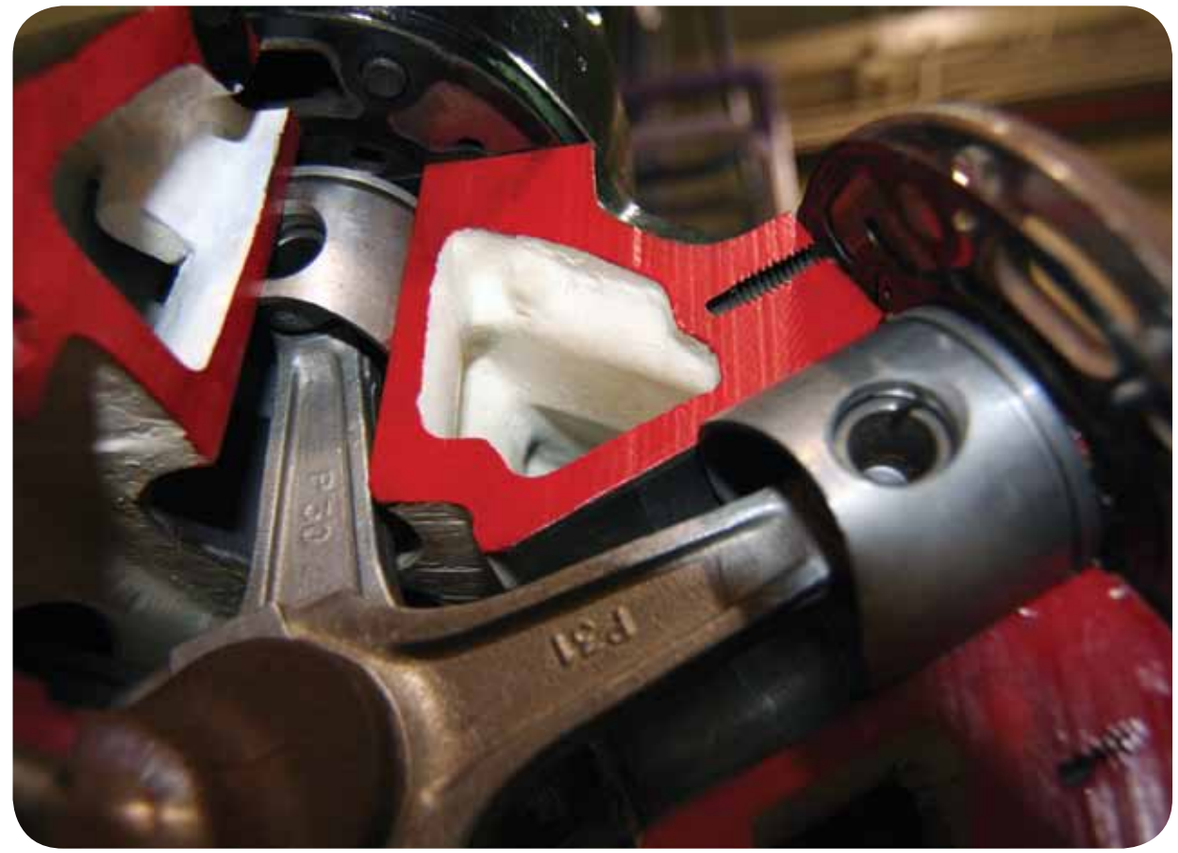

Figure 3. Oil is returned to the compressor crankcase through a small return line.

Leaky Oil Separator

When the oil level in the oil separator becomes high enough to raise a float, an oil return needle is opened, and the oil is returned to the compressor crankcase through a small return line. The pressure difference between the high and low sides of the refrigeration system is the driving force for the oil to travel from the oil separator to the compressor's crankcase. The oil separator

is in the high side of the system and the compressor crankcase in the low side. The float-operated oil return needle valve is located high enough in the oil sump to allow clean oil to automatically return to the compressor's crankcase. Only a small amount of oil is needed to actuate the float mechanism, which ensures that only a small amount of oil is ever absent from the compressor crankcase at any given time.

When the oil level in the sump of the oil separator drops to a certain level, the float forces the needle valve closed. When the ball and float mechanism on an oil separator goes bad, it may bypass hot discharge gas directly into the compressor's crankcase. The needle valve may also get stuck partially open from grit or a sludging condition in the oil. This will cause high pressure to go directly into the compressor's crankcase causing high low-side pressures and low high-side pressures.

The oil return line on an oil separator should be just above the ambient (surrounding) temperature. If this line is hot, it is probably an indication that discharge gas is sneaking by a partially stuck open needle valve in the oil separator.

Compressor Overheating

The previous chapter dealt mainly with reciprocating compressors experiencing low head pressure and high suction pressure from bad valves. The chapter pointed out reasons why a compressor's valves may become inefficient from being warped or having carbon and/or sludge deposits on them, preventing them from sealing.

Listed below are those reasons:

- Compressor overheating from low suction or high head pressures (high compression ratios);
- Slugging of refrigerant and/or oil;
- Moisture and heat causing sludging problems;
- Refrigerant migration problems;
- Refrigerant flooding problems;
- Acids and/or sludge in the system deteriorating parts;
- TXV set wrong — too much superheat causing compressor overheating;
- Undercharge of refrigerant causing compressor overheating from high compressor superheat; and
- Lack of oil sealing the valves.

Compressor overheating is still today's most serious and frequently occurring field problem a service technician will face. In fact, the first bullet point above mentions high compression ratio.

For this chapter, I want to take a more in-depth look at high compression ratios that cause compressor overheating along with high compressor discharge temperatures.

High Compression Ratios

High compression ratios are caused from:

- High head pressures;
- Low suction pressures; and
- A combination of both.

High compression ratios will cause high compressor discharge temperatures. The compressor's discharge temperature can tell the service technician what is going on inside a refrigeration or air conditioning system. The compressor's discharge temperature is a reflection of the hottest part of a refrigeration system, and there are limits as to how hot a discharge temperature should be.

The compressor's discharge temperature can be measured by placing an insulated thermistor or thermocouple on the discharge line about 3-4 inches from the compressor (Figure 1, page 37). The discharge temperature is a measure of the superheated refrigerant's vapor temperature. Remember, superheated refrigerant refers to a refrigerant vapor that is at a higher temperature than its saturation temperature for a certain pressure. The certain pressure would be the condensing pressure for the high side of the system in this case.

Since the compressor's discharge temperature is a superheated vapor temperature measurement, a pressure-temperature relationship does not exist, and a pressure gauge cannot be used for its measurement. Pressure gauges can only be used for a pressure-temperature relationship when a saturation temperature (evaporating and/or condensing) is wanted.

Since the compressor's discharge temperature is a reflection of what is going on inside the compressor, it must be monitored very closely. The back of the compressor's discharge valve is actually the hottest part of the system, but it is

impossible to measure by a service technician. The next closest place, however, is the discharge line of the compressor.

The limit to any compressor discharge temperature is 225˚F. If the discharge temperature gets higher than 225˚, the system may start to fail from worn rings, acid formations, and oil breakdown. Remember, if the discharge temperature is 225˚, the actual discharge valve will be about 75˚ hotter. This will bring the actual compressor's discharge valve to 300˚. It is a known fact that most oil may start to break down and vaporize at about 350˚. If this occurs, serious overheating problems will happen. And, remember, compressor overheating problems are today's most serious compressor field problems. Service technicians must always monitor compressor discharge temperatures and keep them under 225˚.

Causes

Some main reasons for high compressor discharge temperatures are:

- High condensing pressures;
- Low suction pressures;
- High compressor superheats; and
- High compression ratios.

Below are some of the causes for high condensing pressures:

- Dirty condenser coils;
- Burned-out condenser fans;
- Broken fan belts;
- Undersized condenser coils;
- Overcharge of refrigerant;
- Noncondensables in the system;
- High ambient temperature; and
- Recirculated air over the condenser.

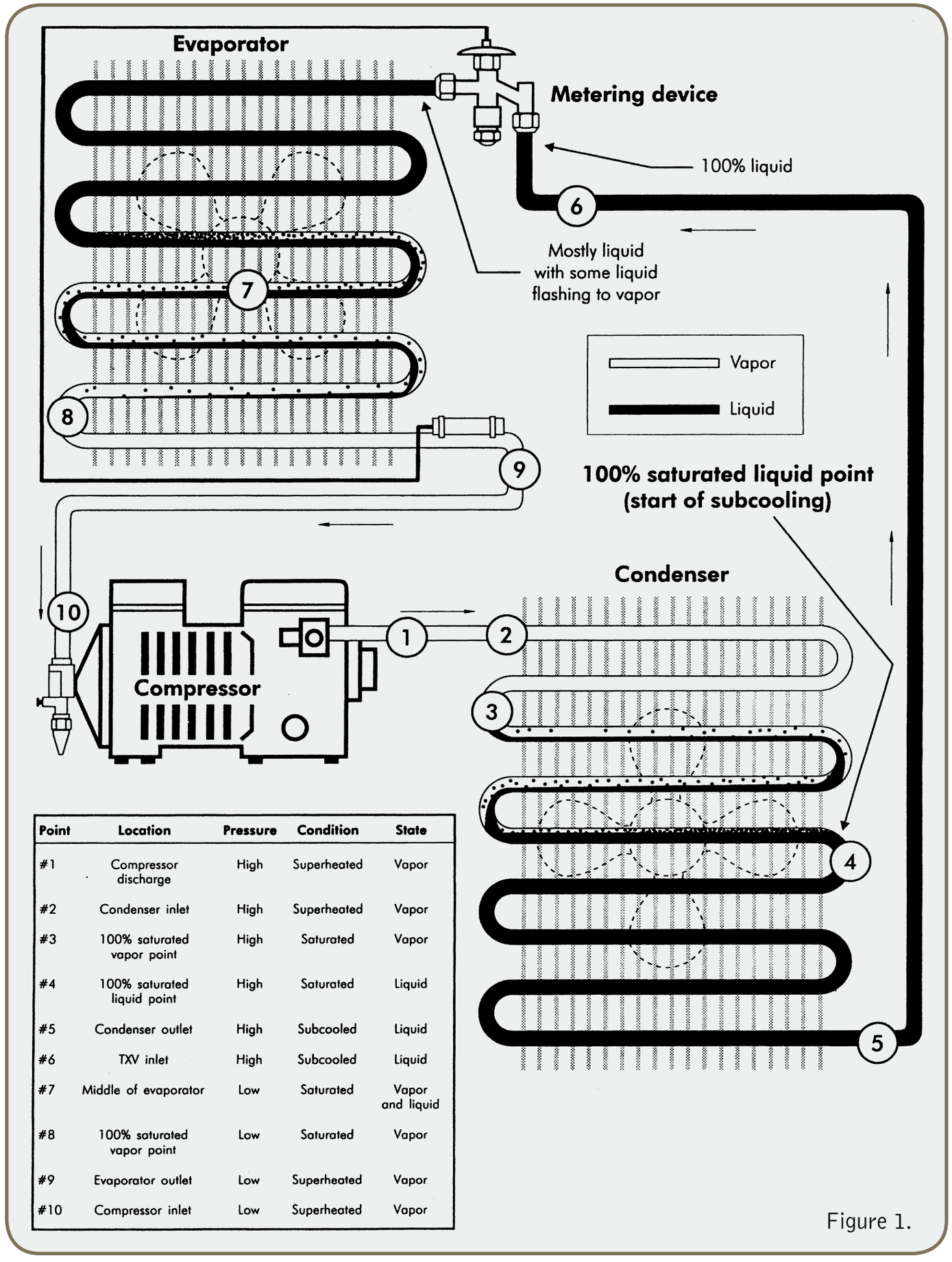

Point	Location	Pressure	Condition	State
#1	Compressor discharge	High	Superheated	Vapor
#2	Condenser inlet	High	Superheated	Vapor
#3	100% saturated vapor point	High	Saturated	Vapor
#4	100% saturated liquid point	High	Saturated	Liquid
#5	Condenser outlet	High	Subcooled	Liquid
#6	TXV inlet	High	Subcooled	Liquid
#7	Middle of evaporator	Low	Saturated	Vapor and liquid
#8	100% saturated vapor point	Low	Saturated	Vapor
#9	Evaporator outlet	Low	Superheated	Vapor
#10	Compressor inlet	Low	Superheated	Vapor

Figure 1.

A high condensing temperature causes a high condensing pressure. Now the compressor must put more work, thus generate more heat of compression, in compressing the suction pressure to the higher condensing pressures.

CAUSES FOR LOW SUCTION PRESSURE:

- Undercharged systems;
- TXV or capillary tubes underfeeding;
- Low evaporator heat loads;
- End of the cycle;
- Frosted evaporator coils;
- Evaporator fan out;
- Kinked suction lines;
- Plugged suction line;
- Liquid line filters;
- Kinked liquid lines; and
- Plugged compressor inlet screens.

Again, more work, thus more heat of compression, will be generated in compressing a lower suction pressure to the condensing pressure.

CAUSES FOR HIGH COMPRESSION RATIOS:

- Low suction pressures;
- High head pressures; and
- A combination of both low suction and high head pressure.

The higher the compression ratio, the higher the compressor's discharge temperature will be. This happens because more heat of compression will be generated when compressing the gases through a greater pressure range.

CAUSES FOR HIGH COMPRESSOR SUPERHEATS:

High compressor superheats can be caused from the evaporator being starved of refrigerant or a suction line seeing too much heat. Listed below are causes for high compressor superheats:

- A restricted liquid line;
- Undercharge;
- Plugged filter drier;
- Kinked liquid line;
- TXV or capillary tube underfeeding;
- Suction line too long; and
- Uninsulated suction line.

In conclusion, compressor discharge temperatures reflect all of the latent heat absorbed in the evaporator, the evaporator superheat, all of the suction line superheat, all of the heat of compression, and motor generated heat at the compressor. It is at the discharge temperature where all of this heat is accumulated and now must start to be rejected in the discharge line and condenser. A high compressor discharge temperature usually means an overheated compressor.

Systematic Troubleshooting an Oil-Logged Evaporator

Refrigerant migration deals with refrigerant migrating back to the compressor's crankcase during the off cycle. This migration of refrigerant is due to a pressure difference between the compressor's crankcase and the refrigerant. Refrigerant migration can cause the compressor's crankcase to lose its oil, thus circulating the oil throughout the refrigeration system. This oil in circulation usually gets caught in the evaporator and can cause an oil-logged evaporator.

Refrigerant flooding refers to liquid refrigerant entering the compressor's crankcase during the on cycle. Flooding can cause flashing of the oil in the compressor's crankcase because of the liquid refrigerant boiling under the oil. This phenomenon can also cause the compressor to lose its oil and circulate it throughout the refrigeration system. Excessive oil in the system will again get caught in the evaporator and cause an oil logged evaporator. This chapter will explore the problems associated with an oil-logged evaporator and a compressor's crankcase low on oil.

Systematic Troubleshooting

Systematic troubleshooting using a system check sheet is still the best method for the conscientious service technician to pinpoint hard-to-find system problems. This chapter explores how evaporators can become oil logged, and includes symptoms with explanations of a system with an oil-logged evaporator. This refrigeration system incorporates HFC-134a as the refrigerant. It has a thermostatic expansion valve (TXV) for the metering device and a receiver at the condenser outlet.

Listed below are ways an evaporator can become oil logged.

- A flooded compressor circulating oil at start-up;
- Too much oil in the system;
- System not piped correctly (no oil traps or piping too large);
- Liquid migration during off cycle, causing crankcase oil foaming on start-ups;
- TXV out of adjustment (too little superheat causing a refrigerant-flooded compressor);
- Not enough defrost periods for low-temperature application machines; and
- Wrong type or viscosity of oil.

Oil in a refrigeration system has many functions. These functions are:

1. Lubricates;
2. Deadens noise;
3. Transfers heat – cools;
4. Reduces friction;
5. Minimizes mechanical wear; and
6. Seals valves — prevents blow-by in valves and other mechanical parts.

Measured Values	
Compressor discharge temperature	190˚
Condenser outlet temperature	78˚
Evaporator outlet temperature	-18
Compressor in temperature	-13
Ambient temperature	75
Box temperature	10
Compressor volts	230
Compressor amps	bit high
Low-side (evaporating) temperature	3.5 inches Hg (-20˚)
High-side (condensing) pressure (psig)	104 psig (90˚)
Calculated Values (˚F)	
Condenser split	15
Condenser subcooling	12
Evaporator superheat	2
Compressor superheat	7

Figure 1. Severely oil-logged evaporator

Oil usually logs in the evaporator because it is the coldest component with the largest tubes, thus the slowest refrigerant velocity. Oil logged in the evaporator will coat the inner wall of the coil and reduce the heat transfer through the walls. This will cause a loss of capacity and poor performance. The compressor will be robbed of some of its crankcase oil and run with a lower than normal oil level. This may score or ruin mechanical parts in the compressor.

Too high of a viscosity oil will also be hard to return from an evaporator and will surely cause oil logging. Usually, the heat from the defrost heaters will warm and thin the oil in the evaporator so it can be returned to the compressor once the compressor starts up. This will happen only if the right viscosity (thickness) of oil is used.

If a suction line is oversized, the refrigerant velocity will be decreased. This will prevent the oil from moving through the suction line to the compressor's crankcase. Remember, it is the refrigerant velocity that will move the oil through the refrigeration system's piping.

The Check List

Figure 1 is a system check sheet for an oil-logged evaporator. Pressures and temperatures will vary depending on the severity of the oil logging. Symptoms of an oil-logged evaporator are:

- Noisy compressor;
- Low oil level in sight glass on compressor's crankcase;
- TXV having a hard time controlling superheat (hunting);
- Low evaporator and compressor superheat; and
- Warmer than normal box temperatures with loss of capacity and lower than normal suction pressure.

Noisy compressor — The compressor may be noisy because of the lack of oil. Metallic sounds may be heard from the lack of lubrication or parts out of tolerance from excessive wear. Oil is a sound deadener as well as a lubricant.

Low oil level in compressor's sight glass — Because a lot of the oil is in the evaporator, the crankcase will be low on oil. In fact, the entire system's components excluding the compressor may have too much oil. This would cause a low oil level in the compressor's crankcase sight glass. Many times a compres-

sor that is flooding with refrigerant will turn into an oil-pumper. The crankcase will be foaming from the liquid refrigerant flashing in it. Small oil droplets entrained in the oil will be pumped through the compressor. This will oil log many components in the system. The velocity of the refrigerant traveling through the lines and P-traps will try to return the oil from the system to the crankcase. Even an oil separator in the compressor's discharge line may have a hard time keeping up with excess oil in circulation. However, oil will continue to get into the system if the compressor flooding situation is not remedied.

TXV having a hard time controlling superheat — The TXV will also see too much oil passing through it. The evaporator's tailpipe will be oil logged and the inside of the tubes coated with oil. The remote bulb of the TXV at the evaporator outlet will have a hard time sensing a true evaporator outlet temperature because of the reduced heat transfer through the line. The TXV will hunt and keep trying to find itself. A constant superheat will not be maintained. The TXV remote bulb may sense a warmer than normal temperature from the oil insulating the inside of the line. This could make the TXV run a low superheat and flood or slug the compressor with refrigerant. Often the sight glass in the liquid line will be discolored with a yellowish or brown tint from refrigerant and oil flowing through it. Technicians may confuse this low superheat reading with an overcharge of refrigerant. However, an overcharge of refrigerant will give high head pressures and high condenser subcooling readings. TXV systems usually can tolerate a bit of an overcharge and still hold a good evaporator superheat if set properly. However, once the head pressures get too high, the TXV will soon overfeed the evaporator and show low superheat.

Low compressor superheat — Because the TXV may be running low superheat, this will cause the compressor (total) superheat to run lower.

Warmer than normal box temperatures with capacity losses — Because of the reduced heat transfer in both the condenser and evaporator from the excess oil coating the inner tubing, capacity will be decreased. The compressor will run longer trying to maintain a desired box temperature. Evaporator temperatures and pressures may run low because of the reduced heat transfer from the oil insulating the evaporator tubes. This will cause reduced mass flow rates and low evaporator pressures.

The service technician must recognize the symptoms brought upon by excessive oil in circulation in a refrigeration system. The service check sheet will be the No. 1 tool in helping the technician recognize that they have this hard-to-detect problem.

Frosted Compressor Head

Many service technicians believe that frost on a suction line or on the compressor's head itself indicates there is liquid refrigerant coming back to the compressor. This simply is not true. All frost means is that the suction line or compressor is below freezing, and the moisture in the air has reached its dew point temperature and condensed. This condensed moisture has then frozen to ice because of the temperature being below 32˚F.

Figure 1 shows frost coming back to an air-cooled compressor. In this photo, the evaporator has over 9˚ of superheat and the compressor has over 25˚ of total superheat. The amperage draw is also normal when compared to nameplate amperage.

Compressor superheat, or sometimes referred to as total superheat, is assurance that there is no liquid refrigerant present at the compressor and that the saturated vapor in the evaporator has gained 25˚ of sensible heat before reaching the compressor. The condensing unit was a low temperature application running –10˚ box temperatures. With –10˚ box temperatures, the evaporating temperatures averaged about –24˚. With –24˚ evaporating temperatures and the system having 25˚ of compressor (total) superheat, the compressor return gas temperature was about 1˚ (Equation 1). Dew (condensed water vapor) will freeze at this temperature (1˚) and become frost on the lines and compressor's head.

It is important for service technicians to understand the difference between suction gas-cooled and air-cooled compressors. In an air-cooled compressor, the suction return gas does not pass over the windings of the compressor. The return gas simply enters the compressor through the suction service valve on the side of the compressor. This gas enters the suction valve and cylinders

Figure 1. Frost coming back to an air-cooled compressor. Evaporator has more than nine degrees of superheat. Compressor has more than 25 degrees of total superheat. *(Photo courtesy Ferris State University.)*

Equation 1

-24˚F (Evaporative temperature)
\+ 25˚F (Compressor superheat)

1˚F (Compressor in temperature)

right away without seeing any other heat source. If there is any liquid (refrigerant or oil) entrained in this suction gas, the valves and/or pistons/rods themselves can be seriously damaged.

This is not the case for refrigerant gas-cooled compressors. Liquid refrigerant coming back to the compressor must first pass around or through the motor windings. There is a good chance that the windings will be producing enough heat to vaporize any liquid refrigerant before it is sucked up through the suction cavities to the valve structures. Any refrigerant must travel in close proximity to the motor windings before it flows uphill and enters the valve structures and cylinders of the compressor.

The only sure way a service technician can tell if liquid refrigerant is coming back to the compressor (floodback) is to measure the compressor superheat at the compressor. Do not rely on a frost pattern on the compressor because it is not a reliable method. This can be accomplished by taking the evaporating pressure with a gauge set and converting it to a temperature with a pressure/temperature chart. Next, with a thermometer or thermistor, measure the compressor in temperature on the suction line about 6 inches from the compressor. The compressor in temperature should always be warmer than the evaporating temperature. If it is at the same temperature or colder, liquid refrigerant is probably present at the compressor. To figure compressor superheat, subtract the evaporating temperature from the compressor in temperature.

The equation is: Compressor in Temperature — Evaporating Temperature = Compressor Superheat.

the NEWS eBooks

AVAILABLE FOR **FREE** DOWNLOAD IN 3 FORMATS:

PDF version, digital edition, and iPad version

Access *The NEWS* eBooks at www.achrnews.com/NEWSebooks.

The NATE EDGE: Technician Excellence

A myriad of issues face North American Technician Excellence (NATE) in its pursuit of certifying technicians — though more than 32,000 hold NATE Certifications. NATE is more about helping the HVACR industry to develop competent technicians. There is a gap between the number of qualified techs and the number of jobs that will need to be filled. The efforts of technicians, contractors, distributors, and manufacturers to address this widening gap through their support of NATE, are evident in this eBook.

The AHRI EDGE: Geothermal Systems

The geothermal market is growing and the HVAC contractor can find it profitable. In order to help contractors just getting into the field or give those who are in the field a few pointers, *The NEWS* teamed up with AHRI for this geothermal eBook. In this book, we cover important issues like geothermal tax credits, financing, and tax incentives. In addition, we showcase a few real-world examples where geothermal was the correct choice for both a homeowner and a school district.

The AHRI EDGE: Ductless Systems

Acceptance of ductless technology is growing fast in the U.S. Ductless is another market segment that allows the contractor an excellent opportunity for growth. *The NEWS* again teamed up with AHRI to produce an eBook to help contractors learn about a specific technology — ductless systems. In this book, you will learn how to promote the advantages of ductless, learn about training options, and also read about real world examples of where ductless was the right technology for a specific job.

HVACR Service + Troubleshooting with The Professor

BY JOHN TOMCZYK

Get insight from renowned HVACR professor at Ferris State University and *NEWS* columnist, John Tomczyk, in this 48-page eBook covering a wide range of service and troubleshooting topics. Subjects covered in the book's 16 chapters include: system check sheets, bad compressor valves, loss of air conditioning cooling, condenser splitting, frost on the compressor's head, restricted TXV metering device, leak detection methods, refrigerant migration, and more.